WAKE COUNTY

EMS STATION RENOVATIONS ADDENDUM NO. 2

EAST RALEIGH EMS STATION 7
2910 KIDD ROAD | RALEIGH, NC 27710

NCSU EMS STATION 8
1361 VARSITY DRIVE | RALEIGH, NC 27607

WAKE FOREST EMS STATION 10
706 S. FRANKLIN STREET | WAKE FOREST, NC 27587

WAKE COUNTY REQUEST FOR BIDS NUMBER: **RFB #26-082**

DATE: **SEPTEMBER 10, 2026**

BID DATE, TIME, AND LOCATION HAVE NOT BEEN CHANGED.

NOTE: THE 00300 – BID PROPOSAL FORM – SINGLE PRIME GENERAL CONSTRUCTION **WAS REVISED IN ADDENDUM NO. 1**. THE **UPDATED BID PROPOSAL FORM** HAS A **RED REVISION 1 DATED 08/27/26** WITHIN THE DOCUMENT FOOTER TO DISTINGUISH IT FROM THE PREVIOUSLY PROVIDED (NOW VOID) VERSION. **PLEASE MAKE SURE TO USE THE REVISED FORM WHEN SUBMITTING YOUR BID**.

GENERAL:

This addendum forms a part of the Contract Documents of the above referenced project and modifies the original Contract Documents as described below. Acknowledge receipt of this Addendum in the space provided on the Form of Proposal Signature Page.

This addendum has been distributed to: all Pre-Bid Conference Attendees, all Contractors that requested Bid Documents from Williard Stewart Architects, and to all Plan Rooms / Plan Services listed in the Notice to Bidders.

This addendum has also been uploaded to the same online file-sharing site used by Williard Stewart Architects to distribute digital PDFs of the Bid Documents for this project:

https://www.dropbox.com/scl/fo/cp690tcu4cmvro92f1dov/AHfayHhlFh67z9fWSvK9Ttw?rlkey=dgafxd321gjf5gi0uathfyb97&st=j5k1k7hq&dl=0

PROJECT MANUAL:

SECTION 00075 – TABLE OF CONTENTS

1. **ADD** the following section after the Division 26 technical specifications in the Table of Contents:

"APPENDIX A – SECURITY REFERENCE DRAWINGS

SC-01 – Floor Plans	1 Drawing	Dated August 17, 2026
SC-02 – Security Details & Riser Diagram	1 Drawing	Dated August 10, 2026

The drawings included in Appendix A are provided for reference only. The General Construction scope only includes electrical infrastructure for security (as shown in the E-Series Electrical Drawings and associated Specifications) required for security systems and the Security Allowance as included in Specification Section 012100 – Allowances."

SECTION 00800 – SUPPLEMENTAL GENERAL CONDITONS

1. Article 1 – Definitions, Paragraph 1.18: **UPDATE** the "Drawings Applicable to this Contract" as follows:
    a. 01 | East Raleigh EMS Station 7
        i. Drawing 01-D101 – Floor Plan | Demolition: **REVISE** the date to be 08/27/26.
        ii. Drawing 01-A801 – Finish and Furnishing Plan and Schedules: **REVISE** the date to be 08/27/26.
        iii. Drawing 01-M111 – Mechanical New Work: **REVISE** the date to be 09/10/26.
        iv. Drawing 01-M601 – Schedules: **REVISE** the date to be 09/10/26.
        v. Drawing 01-E111 – Electrical New Work: **REVISE** the date to be 09/10/26.
        vi. Drawing 01-E301 – Sections: **DELETE** Drawing 01-E301 from the drawing list.
        vii. Drawing 01-E502 – Details: **REVISE** the date to be 09/10/26.
        viii. Drawing 01-E503 – Details: **REVISE** the date to be 09/10/26.
    b. 02 | NC State EMS Station 8
        i. Drawing 02-A801 – Finish and Furnishing Plan and Schedules: **REVISE** the date to be 08/27/26.
        ii. Drawing 02-M111 – Mechanical New Work: **REVISE** the date to be 09/10/26.
        iii. Drawing 02-M601 – Schedules: **REVISE** the date to be 09/10/26.
        iv. Drawing 02-E111 – Electrical New Work: **REVISE** the date to be 09/10/26.
        v. Drawing 02-E301 – Sections: **DELETE** Drawing 01-E301 from the drawing list.
        vi. Drawing 02-E502 – Details: **REVISE** the date to be 09/10/26.
        vii. Drawing 02-E503 – Details: **REVISE** the date to be 09/10/26.

c. 03 | Wake Forest EMS Station 10
   i. Drawing 03-A801 – Finish and Furnishing Plan and Schedules: **REVISE** the date to be 08/27/26.
   ii. Drawing 03-M111 – Mechanical New Work: **REVISE** the date to be 09/10/26.
   iii. Drawing 03-M601 – Schedules: **REVISE** the date to be 09/10/26.
   iv. Drawing 03-E111 – Electrical New Work: **REVISE** the date to be 09/10/26.
   v. Drawing 03-E301 – Sections: **DELETE** Drawing 01-E301 from the drawing list.
   vi. Drawing 03-E502 – Details: **REVISE** the date to be 09/10/26.
   vii. Drawing 03-E503 – Details: **REVISE** the date to be 09/10/26.

SECTION 087100 – DOOR HARDWARE

1. **REPLACE** the previously issued Specification Section 087100-Door Hardware with the attached **REVISED** Specification Section 087100-Door Hardware (14 Pages, Revision 1, Dated 09/10/26). Revised content is identified in bold red text.

APPENDIX A – SECURITY REFERENCE DRAWINGS

1. **ADD** Sheet SC-01 – Floor Plans (Dated 08/17/26).
2. **ADD** Sheet SC-02 – Security Details & Riser Diagram (Dated 08/10/26).

DRAWINGS:

SHEET 01-M111 MECHANICAL NEW WORK [EAST RALEIGH STATION 7]

1. **REPLACE** Sheet 01-M111 – Mechanical New Work with the attached, updated 01-M111 – Mechanical New Work (Revision 1, Dated 09/10/26). Ventilation louver added in the plan south wall of Telecom 101.

SHEET 01-M601 SCHEDULES [EAST RALEIGH STATION 7]

1. **REPLACE** Sheet 01-M601 – Schedules with the attached, updated 01-M601 – Schedules (Revision 1, Dated 09/10/26). DMMS-7-1 Refrigerant Calculations added. DMMS-7-1 tonnage updated, and refrigerant leak mitigation added.

SHEET 01-E111 ELECTRICAL NEW WORK [EAST RALEIGH STATION 7]

1. **REPLACE** Sheet 01-E111 – Electrical New Work with the attached, updated Sheet 01-E111 – Electrical New Work (Revision 1, Dated 09/10/26). Telecom 101 revisions. Camera at plan northeast corner of Vehicle Bays 109 deleted.

SHEET 01-E301 SECTIONS [EAST RALEIGH STATION 7]

1. **DELETE** Sheet 01-E301 – Sections.

SHEET 01-E502 DETAILS [EAST RALEIGH STATION 7]

1. **REPLACE** Sheet 01-E502 – Details with the attached, updated Sheet 01-E502 – Details (Revision 1, Dated 09/10/26). Telecom Equipment Rack Elevation detail updated.

SHEET 01-E503 DETAILS [EAST RALEIGH STATION 7]

1. **REPLACE** Sheet 01-E503 – Details with the attached, updated Sheet 01-E503 – Details (Revision 1, Dated 09/10/26). Wall Mounted IDF detail deleted. Added details: Overhead Door Detail, Overhead Door Control Schematic, and Typical Card Access Door Rough-In Detail.

SHEET 02-M111 MECHANICAL NEW WORK [NC STATE STATION 8]

1. **REPLACE** Sheet 02-M111 – Mechanical New Work with the attached, updated 02-M111 – Mechanical New Work (Revision 1, Dated 09/10/26). Ventilation louver added in the plan south wall of Telecom 101.

SHEET 02-M601 SCHEDULES [NC STATE STATION 8]

1. **REPLACE** Sheet 02-M601 – Schedules with the attached, updated 02-M601 – Schedules (Revision 1, Dated 09/10/26). DMMS-8-1 Refrigerant Calculations added. DMMS-8-1 tonnage updated, and refrigerant leak mitigation added.

SHEET 02-E111 ELECTRICAL NEW WORK [NC STATE STATION 8]

1. **REPLACE** Sheet 02-E111 – Electrical New Work with the attached, updated Sheet 02-E111 – Electrical New Work (Revision 1, Dated 09/10/26). Telecom 101 revisions. Camera at plan northeast corner of Vehicle Bays 109 deleted.

SHEET 02-E301 SECTIONS [NC STATE STATION 8]

1. **DELETE** Sheet 02-E301 – Sections.

SHEET 02-E502 DETAILS [NC STATE STATION 8]

1. **REPLACE** Sheet 02-E502 – Details with the attached, updated Sheet 02-E502 – Details (Revision 1, Dated 09/10/26). Telecom Equipment Rack Elevation detail updated.

SHEET 02-E503 DETAILS [NC STATE STATION 8]

1. **REPLACE** Sheet 02-E503 – Details with the attached, updated Sheet 02-E503 – Details (Revision 1, Dated 09/10/26). Wall Mounted IDF detail deleted. Added details: Overhead Door Detail, Overhead Door Control Schematic, and Typical Card Access Door Rough-In Detail.

SHEET 03-M111 MECHANICAL NEW WORK [WAKE FOREST STATION 10]

1. **REPLACE** Sheet 03-M111 – Mechanical New Work with the attached, updated 03-M111 – Mechanical New Work (Revision 1, Dated 09/10/26). Ventilation louver added in the plan south wall of Telecom 101.

SHEET 03-M601 SCHEDULES [WAKE FOREST STATION 10]

1. **REPLACE** Sheet 03-M601 – Schedules with the attached, updated 03-M601 – Schedules (Revision 1, Dated 09/10/26). DMMS-10-1 Refrigerant Calculations added. DMMS-10-1 tonnage updated, and refrigerant leak mitigation added.

SHEET 03-E111 ELECTRICAL NEW WORK [NC STATE STATION 8]

1. **REPLACE** Sheet 03-E111 – Electrical New Work with the attached, updated Sheet 03-E111 – Electrical New Work (Revision 1, Dated 09/10/26). Telecom 101 revisions. Camera at plan northeast corner of Vehicle Bays 109 deleted.

SHEET 03-E301 SECTIONS [NC STATE STATION 8]

1. **DELETE** Sheet 03-E301 – Sections.

SHEET 03-E502 DETAILS [NC STATE STATION 8]

1. **REPLACE** Sheet 03-E502 – Details with the attached, updated Sheet 03-E502 – Details (Revision 1, Dated 09/10/26). Telecom Equipment Rack Elevation detail updated.

SHEET 03-E503 DETAILS [NC STATE STATION 8]

1. **REPLACE** Sheet 03-E503 – Details with the attached, updated Sheet 03-E503 – Details (Revision 1, Dated 09/10/26). Wall Mounted IDF detail deleted. Added details: Overhead Door Detail, Overhead Door Control Schematic, and Typical Card Access Door Rough-In Detail.

ATTACHMENTS:

- Specification Section 087100-Door Hardware (14 Pages, Revision 1, Dated 09/10/26)
- Appendix A Reference Drawing SC-01 – Floor Plans (1 Sheet, Dated 08/17/26)
- Appendix A Reference Drawing SC-02 – Security Details & Riser Diagram (1 Sheet, Dated 08/10/26).
- Drawing Sheet 01-M111 – Mechanical New Work (1 Sheet, Revision 1, Dated 09/10/26)
- Drawing Sheet 01-M601 – Schedules (1 Sheet, Revision 1, Dated 09/10/26)
- Drawing Sheet 01-E111 – Electrical New Work (1 Sheet, Revision 1, Dated 09/10/26)
- Drawing Sheet 01-E502 – Details (1 Sheet, Revision 1, Dated 09/10/26)
- Drawing Sheet 01-E503 – Details (1 Sheet, Revision 1, Dated 09/10/26)
- Drawing Sheet 02-M111 – Mechanical New Work (1 Sheet, Revision 1, Dated 09/10/26)
- Drawing Sheet 02-M601 – Schedules (1 Sheet, Revision 1, Dated 09/10/26)
- Drawing Sheet 02-E111 – Electrical New Work (1 Sheet, Revision 1, Dated 09/10/26)
- Drawing Sheet 02-E502 – Details (1 Sheet, Revision 1, Dated 09/10/26)
- Drawing Sheet 02-E503 – Details (1 Sheet, Revision 1, Dated 09/10/26)
- Drawing Sheet 03-M111 – Mechanical New Work (1 Sheet, Revision 1, Dated 09/10/26)
- Drawing Sheet 03-M601 – Schedules (1 Sheet, Revision 1, Dated 09/10/26)
- Drawing Sheet 03-E111 – Electrical New Work (1 Sheet, Revision 1, Dated 09/10/26)
- Drawing Sheet 03-E502 – Details (1 Sheet, Revision 1, Dated 09/10/26)
- Drawing Sheet 03-E503 – Details (1 Sheet, Revision 1, Dated 09/10/26)

END ADDENDUM NO. 2

Submitted by: **Paul Stewart, AIA** | Williard Stewart Architects, PA
122 Cox Avenue | Raleigh, North Carolina, 27605
paul@wscarchitects.com | (919) 740-5521|(919) 834-2149 (Fax)

CC: Williard Stewart Architects Bid Document Distribution List [Contractors and Subcontractors that Requested Documents from WSA (Various)]
Attendees of August 19, 2026, Pre-Bid Conference [Mandatory for Interested General Contractors]
Wake County Facilities Design & Construction | Dewberry | File

SECTION 087100 - DOOR HARDWARE

PART 1 - GENERAL

1.1 RELATED DOCUMENTS

A. Drawings and general provisions of Contract, including General and Supplementary Conditions and Division 1 Specification Sections, apply to this Section.

1.2 SUMMARY

A. This Section includes items known commercially as finish or door hardware that are required for swing, sliding, and folding doors, except special types of unique hardware specified in the same sections as the doors and door frames on which they are installed.

B. This Section includes the following:

1. Hinges.
2. Lock cylinders and keys.
3. Lock and latch sets.
4. Bolts.
5. Push/pull units.
6. Closers.
7. Overhead holders and door control devices.
8. Protection plates.
9. Weatherstripping and door sweeps for exterior doors.
10. Thresholds.
11. Silencers.
12. Key control system.

C. Related Sections: The following Sections contain requirements that relate to this Section:

1. Division 1 Section “Summary” for security system coordination.
3. Division 1 Section “Alternates” for Owner preferred door hardware alternate.
4. Division 6 Section "Interior Architectural Woodwork" for cabinet hardware.
5. Division 8 Section "Standard Steel Doors and Frames" for silencers integral with hollow metal frames.
6. Division 8 Section "Flush Wood Doors" for factory pre-fitting and factory pre-machining of doors for door hardware.
7. Division 8 Section "Sectional Overhead Doors" for coordination with overhead doors.

1.3 DOOR HARDWARE SCHEDULE

A. Hardware Schedule is included in this Section.

1.4 SUBMITTALS

A. General: Submit the following in accordance with Conditions of Contract and Division 1 Specification sections.

B. Product data including manufacturers' technical product data for each item of door hardware, installation instructions, maintenance of operating parts and finish, and other information necessary to show compliance with requirements.

C. Final hardware schedule coordinated with doors, frames, and related work to ensure proper size, thickness, hand, function, and finish of door hardware.

1. Once the Contract for construction is awarded, the Architect shall select the general quality, function material and finish for each type of door hardware required, and present this information to the Contractor. Contractor's Door / Hardware supplier will then prepare Hardware Schedule, including pricing, for approval by Architect and Owner.

2. Final Hardware Schedule Content: Based on hardware selections indicated, organize schedule into "hardware sets" indicating complete designations of every item required for each door or opening. Include the following information:

a. Type, style, function, size, and finish of each hardware item.
b. Name and manufacturer of each item.
c. Fastenings and other pertinent information.
d. Location of each hardware set cross referenced to indications on Drawings both on floor plans and in door and frame schedule.
e. Explanation of all abbreviations, symbols, and codes contained in schedule.
f. Mounting locations for hardware.
g. Door and frame sizes and materials.
h. Keying information.

3. Submittal Sequence: Submit final schedule at earliest possible date particularly where acceptance of hardware schedule must precede fabrication of other work that is critical in the Project construction schedule. Include with schedule the product data, samples, shop drawings of other work affected by door hardware, and other information essential to the coordinated review of schedule. Schedule should be submitted within 30 days from date of Commencement of Contract.

4. Keying Schedule: Submit separate detailed schedule indicating clearly how the Owner's final instructions on keying of locks has been fulfilled.

D. Templates for doors, frames, and other work specified to be factory prepared for the installation of door hardware. Check shop drawings of other work to confirm that adequate provisions are made for locating and installing door hardware to comply with indicated requirements.

1.5 QUALITY ASSURANCE

A. Single Source Responsibility: Obtain each type of hardware (latch and lock sets, hinges, closers, etc.) from a single manufacturer.

B. Supplier Qualifications: A recognized architectural door hardware supplier, with warehousing facilities in the Project's vicinity, that has a record of successful in-service performance for supplying door hardware similar in quantity, type, and quality to that indicated for this Project and that employs an experienced architectural hardware consultant (AHC) who is available to Owner, Architect, and Contractor, at reasonable times during the course of the Work, for consultation.

1. Require supplier to meet with Owner and Architect as a prerequisite to preparation of Hardware Schedule, as described with respect to Door Hardware Allowance described elsewhere in this Section.

2. Require supplier to meet with Owner to finalize keying requirements and to obtain final instructions in writing.

C. Fire-Rated Door Assemblies: Where fire-rated door assemblies are indicated, provide door hardware rated for use in assemblies complying with NFPA 80 that are listed and labeled by a qualified testing agency, for fire-protection ratings indicated, based on testing at positive pressure according to NFPA 252 or UL 10C, unless otherwise indicated. Provide hardware as required in the event hardware as scheduled is not sufficient. No increase in the Contract sum will be allowed for any additional hardware required by fire codes or accessibility codes.

D. Accessibility Requirements: For door hardware on doors in an accessible route, comply with the U.S. Architectural & Transportation Barriers Compliance Board's ADA-ABA Accessibility Guidelines ICC/ANSI A117.1.

E. Means of Egress Doors: Latches do not require more than 15 lbf (67N) to release the latch. Locks do not require use of a key, tool, or special knowledge of operation.

F. Electrified Door Hardware: Listed and labeled as defined in NFPA 70, Article 100, by a testing agency acceptable to authorities having jurisdiction.

G. Keying Conference: Conduct conference at Project site to comply with requirements in Division 01 Section "Project Management and Coordination." In addition to Owner, Construction Manager, Contractor, and Architect, conference participants shall also include Installer's Architectural Hardware Consultant and Owner's security consultant. Incorporate keying conference decisions into final keying schedule after reviewing door hardware keying system including, but not limited to, the following:

1. Function of building, flow of traffic, purpose of each area, degree of security required, and plans for future expansion.
2. Preliminary key system schematic diagram.
3. Requirements for key control system.
4. Requirements for access control.
5. Address for delivery of keys.

H. Pre-Installation Conference: Conduct conference at Project site.

1.6 PRODUCT HANDLING

A. Tag each item or package separately with identification related to final hardware schedule, and include basic installation instructions with each item or package.

B. Packaging of door hardware is responsibility of supplier. As material is received by hardware supplier from various manufacturers, sort and repackage in containers clearly marked with appropriate hardware set number to match set numbers of approved hardware schedule. Two or more identical sets may be packed in same container.

C. Inventory door hardware jointly with representatives of hardware supplier and hardware installer until each is satisfied that count is correct.

D. Deliver individually packaged door hardware items promptly to place of installation (shop or Project site).

E. Provide secure lock-up for door hardware delivered to the Project, but not yet installed. Control handling and installation of hardware items that are not immediately replaceable so that completion of the Work will not be delayed by hardware losses both before and after installation.

1.7 COORDINATION

A. Coordinate layout and installation of floor-recessed door hardware with floor construction. Cast anchoring inserts into concrete. Concrete, reinforcement, and formwork requirements are specified in Division 03.

B. Installation Templates: Distribute for doors, frames, and other work specified to be factory prepared. Check Shop Drawings of other work to confirm that adequate provisions are made for locating and installing door hardware to comply with indicated requirements.

C. Security: Coordinate installation of door hardware, keying, and access control with Owner's security consultant.

D. Electrical System Roughing-In: Coordinate layout and installation of electrified door hardware with connections to power supplies and building safety and security systems.

1.8 WARRANTY

A. Special Warranty: Manufacturer's standard form in which manufacturer agrees to repair or replace components of door hardware that fail in materials or workmanship within specified warranty period.

1. Failures include, but are not limited to, the following:

a. Structural failures including excessive deflection, cracking, or breakage.
b. Faulty operation of doors and door hardware.
c. Deterioration of metals, metal finishes, and other materials beyond normal weathering and use.

2. Warranty Period: Three years from date of Substantial Completion, unless otherwise indicated.

a. Electromagnetic and Delayed-Egress Locks: Five years from date of Substantial Completion.
b. Exit Devices: Two years from date of Substantial Completion.
c. Manual Closers: 10 years from date of Substantial Completion.
d. Concealed Floor Closers: 10 years from date of Substantial Completion.

1.9 MAINTENANCE

A. Maintenance Tools and Instructions: Furnish a complete set of specialized tools and maintenance instructions as needed for Owner's continued adjustment, maintenance, and removal and replacement of door hardware.

PART 2 - PRODUCTS

2.1 MANUFACTURERS

A. Manufacturers: Subject to compliance with requirements, provide products by Basis of Design manufacturers identified in hardware schedule or approved equal.

B. Hardware Schedule:

Hinges:
Hager----------BB1199----------BB1279---BB1168-----BB1193
Mckinney----------T4A3386----------TA2714---T4A3786----TA2314
Stanley----------FBB199----------FBB168---FBB179-----FBB191
HB Ives----------5BB1HW----------5BB1

Exit Devices:
Sargent----------88 SERIES US32D
Von Duprin-------99 SERIES US26D
Precision--------2000 SERIES US32D

Locks:
Sargent----------8200 LNJ US26D
Schlage----------9000 03A US26D
Best----------45H 3H US26D

Closers:
Sargent----------281 SERIES
LCN----------4040XP SERIES
Ryobi----------4550 SERIES

OH Stops:
Glynn Johnson: 900 SERIES-------US32D
454 SERIES-------US32D

ABH: 9020 SERIES-----US32D
4400 SERIES-----US32D

Sargent: 590 SERIES-------US26D
1540 SERIES-----US26D

Manufacturer List

Code	Name
AB	ABH Manufacturing Inc.
AD	Adams Rite
IV	Ives
LC	LCN Closers
LO	Schlage Electronics
MC	McKinney
PE	Pemko
RF	Rixon

RO	Rockwood
SA	Sargent
ST	Stanley
VO	Von Duprin
VA01	Various
YA	Yale/**Accentra**

NOTE: All cores for security doors to be LFIC 6-pin. Coordinate model number with Wake County Locksmith.

SET #01 | Door 101 [One Per EMS Station]

2	Hinges	T4A3386 4-1/2 x 4-1/2 NRP	32D	MC
1	Electrified Hinge	**QC8**	32D	MC
1	**Frame Cable**	**QC-C1500P**		**MC**
1	**Lock Harness**	**QC-C300P/CQ-C306P**		**MC**
1	Electrified Lockset	**RX-8271**	626	**SA**
1	Card Reader	Card Reader by Security Contractor		
1	Permanent Cylinder	**2196 LFIC**		**YA**
1	Temporary Cylinder	Construction Cylinder by Contractor		
1	Closer	4040 XP CUSH	AL	LCN
1	Position Switch	DPS by Security Contractor		
1	Lock Power Supply	Power Supply by Security Contractor		
3	Door Silencers	608	Grey	RO

NOTE: Card Reader, DPS, and Power Supply will be by the Security Contractor as part of the project Security Allowance. Operation: Door normally closed and locked. Presentation of authorized credentials unlocks outside lever and allows ingress. Egress by inside lever at all times.

SET #02 | Doors 106, 108, 110, 111, 112, 113 [One of Each Per EMS Station]

3	Door Silencers	608	Grey	RO
1	Privacy Lockset	**YRC-10XG05-LP (Entry Function)**	**26D**	**SA**
1	**Permanent Cylinder**	**1210 LFIC Core**		**YA**

NOTE: Other existing door hardware to remain.

SET #03 | Door 104A [One Per EMS Station]

2	Hinges	T4A3386 4-1/2 x 4-1/2 NRP	32D	MC
1	Electrified Hinge	**QC8**	32D	MC
1	**Frame Cable**	**QC-C1500P**		**MC**
1	**Lock Harness**	**QC-C300P/CQ-C306P**		**MC**
1	Electrified Lockset	**RX-8271**	626	**SA**
1	Card Reader	Card Reader by Security Contractor		
1	Permanent Cylinder	**2196 LFIC**		**YA**
1	Temporary Cylinder	Construction Cylinder by Contractor		
1	Closer	4040 XP CUSH	AL	LCN
1	Position Switch	DPS by Security Contractor		
1	Lock Power Supply	Power Supply by Security Contractor		
1	Weatherstripping (Set)	290 APK 1x82” 2x84”		PE
1	Protection Plate	K1050 10”x34”	US32D	RO
1	Door Bottom Sweep	315 Series	C	PE

NOTE: Existing Door Threshold to remain. Card Reader, DPS, and Power Supply will be by the Security Contractor as part of the project Security Allowance. Operation: Door normally closed and locked. Presentation of authorized credentials unlocks outside lever and allows ingress. Egress by inside lever at all times.

SET #04 | Door 104B [One Per EMS Station]

2	Hinges	T4A3386 4-1/2 x 4-1/2 NRP	32D	MC
1	Electrified Hinge	**QC8**	32D	MC
1	**Frame Cable**	**QC-C1500P**		**MC**
1	**Lock Harness**	**QC-C300P/CQ-C306P**		**MC**
1	Electrified Lockset	**RX-8271**	626	**SA**
1	Card Reader	Card Reader by Security Contractor		
1	Permanent Cylinder	**2196 LFIC**		**YA**
1	Temporary Cylinder	Construction Cylinder by Contractor		
1	Closer	4040 XP CUSH	AL	LCN
1	Position Switch	DPS by Security Contractor		
1	Lock Power Supply	Power Supply by Security Contractor		
1	Weatherstripping (Set)	290 APK 1x82" 2x84"		PE
1	Protection Plate	K1050 10"x34"	US32D	RO

NOTE: Existing Door Threshold to remain. Card Reader, DPS, and Power Supply will be by the Security Contractor as part of the project Security Allowance. Operation: Door normally closed and locked. Presentation of authorized credentials unlocks outside lever and allows ingress. Egress by inside lever at all times.

SET #05 | Door 104C [One Per EMS Station]

3	Hinges	TA2714 4-1/2 x 4-1/2	26D	MC
1	Lockset	**LC-8236-LNJ**	**26D**	**SA**
1	**Permanent Cylinder**	**2196 LFIC**		**YA**
1	Overhead Stop	10 Series	630	RF

SET #06 | Door 106A [One Per EMS Station]

2	Hinges	T4A3386 4-1/2 x 4-1/2 NRP	32D	MC
1	Electrified Hinge	**QC8**	32D	MC
1	**Frame Cable**	**QC-C1500P**		**MC**
1	**Lock Harness**	**QC-C300P/CQ-C306P**		**MC**
1	Electrified Lockset	**RX-8271**	626	**SA**
1	Card Reader	Card Reader by Security Contractor		
1	Permanent Cylinder	**2196 LFIC**		**YA**
1	Temporary Cylinder	Construction Cylinder by Contractor		
1	Closer	4040 XP CUSH	AL	LCN
1	Position Switch	DPS by Security Contractor		
1	Lock Power Supply	Power Supply by Security Contractor		
1	Weatherstripping (Set)	290 APK 1x82" 2x84"		PE
1	Protection Plate	K1050 10"x34"	US32D	RO
3	Door Silencers	608	Grey	RO

NOTE: Card Reader, DPS, and Power Supply will be by the Security Contractor as part of the project Security Allowance. Operation: Door normally closed and locked. Presentation of authorized credentials unlocks outside lever and allows ingress. Egress by inside lever at all times.

SET #07 | Door 109A [One Per EMS Station]

1	Position Switch	DPS by Security Contractor		
1	Weatherstripping (Set)	290 APK 1x82" 2x84"		PE
1	Protection Plate	K1050 10"x34"	US32D	RO
1	Door Bottom Sweep	315 Series	C	PE

NOTE: Existing Door Threshold, Hinges, Lockset, and Cylinder to remain. DPS will be by the Security Contractor as part of the project Security Allowance.

SET #08 | Door 109B [One Per EMS Station]

2	Hinges	TA 413386 4-1/2 x 4-1/2 NRP	32D	MC
1	Electrified Hinge	**QC8**	32D	MC
1	**Frame Cable**	**QC-C1500P**		**MC**
1	**Lock Harness**	**QC-C006P**		**MC**
1	Electrified Rim Exit	**LC-55-5608804-ETJ**		**SA**
1	**Permanent Cylinder [Lever Operator Deleted]**	**1193 LFIC**		**YA**
1	Card Reader	Card Reader by Security Contractor		
1	Permanent Cylinder	**2196 LFIC**		**YA**
1	Temporary Cylinder	Construction Cylinder by Contractor		
1	Closer	4040XP CUSH	689	LCN
1	Position Switch	DPS by Security Contractor		
1	Lock Power Supply	Power Supply by Security Contractor		
1	Weatherstripping (Set)	290 APK 1x82" 2x84"		PE
1	Protection Plate	K1050 10"x34"	US32D	RO
1	Door Bottom Sweep	315 Series	C	PE

NOTE: Existing Door Threshold to remain. Card Reader, DPS, and Power Supply will be by the Security Contractor as part of the project Security Allowance. Operation: Door normally closed and locked. Presentation of authorized credentials unlocks outside lever and allows ingress. Egress by inside lever at all times.

SET #09 | Doors 102, 105, 107 [One of Each Per EMS Station]

3	Door Silencers	608	Grey	RO
1	Privacy Lockset	**V33 10XU66-VSLL (Privacy Function)**	**26D**	**SA**

2.2 MATERIALS AND FABRICATION

A. Base Metals: Produce hardware units of basic metal and forming method indicated, using manufacturer's standard metal alloy, composition, temper, and hardness, but in no case of lesser (commercially recognized) quality than specified for applicable hardware units by applicable ANSI/BHMA A156 series standards for each type of hardware item and with ANSI/BHMA A156.18 for finish designations indicated. Do not furnish "optional" materials or forming methods for those indicated, except as otherwise specified.

B. Fasteners: Provide hardware manufactured to conform to published templates, generally prepared for machine screw installation. Do not provide hardware that has been prepared for self-tapping sheet metal screws, except as specifically indicated.

1. Concealed Fasteners: For door hardware units that are exposed when door is closed, except for units already specified with concealed fasteners. Do not use through bolts for installation where bolt

head or nut on opposite face is exposed unless it is the only means of securely attaching the door hardware. Where through bolts are used on hollow door and frame construction, provide sleeves for each through bolt.

2. Fire-Rated Applications:

   a. Wood or Machine Screws: For the following:

      1) Hinges mortised to doors or frames.
      2) Strike plates to frames.
      3) Closers to doors and frames.

   b. Steel Through Bolts: For the following unless door blocking is provided:

      1) Surface hinges to doors.
      2) Closers to doors and frames.
      3) Surface-mounted exit devices.

3. Spacers or Sex Bolts: For through bolting of hollow-metal doors.

4. Fasteners for Wood Doors: Comply with requirements in DHI WDHS.2, "Recommended Fasteners for Wood Doors."

5. Gasketing Fasteners: Provide noncorrosive fasteners for exterior applications and elsewhere as indicated.

C. Furnish screws for installation with each hardware item. Provide Phillips flat-head screws except as otherwise indicated. Finish exposed (exposed under any condition) screws to match hardware finish or, if exposed in surfaces of other work, to match finish of this other work as closely as possible including "prepared for paint" surfaces to receive painted finish.

D. Provide concealed fasteners for hardware units that are exposed when door is closed except to the extent no standard units of type specified are available with concealed fasteners. Do not use thru-bolts for installation where bolt head or nut on opposite face is exposed in other work unless their use is the only means of reinforcing the work adequately to fasten the hardware securely. Where thru-bolts are used as a means of reinforcing the work, provide sleeves for each thru-bolt or use sex screw fasteners.

2.3 HINGES, BUTTS, AND PIVOTS

A. Hinges: BHM A156.1. Provide template-produced hinges for hinges installed on hollow-metal doors and hollow-metal frames.

B Templates: Except for hinges and pivots to be installed entirely (both leaves) into wood doors and frames, provide only template-produced units.

B. Screws: Provide Phillips flat-head screws complying with the following requirements:

1. For metal doors and frames install machine screws into drilled and tapped holes.
2. For fire-rated wood doors install #12 x 1-1/4-inch, threaded-to-the-head steel wood screws.
3. Finish screw heads to match surface of hinges or pivots.

C. Hinge Pins: Except as otherwise indicated, provide hinge pins as follows:

1. All exterior doors: Non-removable pins.
2. Interior Doors: Non-rising pins.

D. Number of Hinges: Provide number of hinges indicated but not less than 3 hinges per door leaf for doors 90 inches or less in height and one additional hinge for each 30 inches of additional height.

1. Fire-Rated Doors: Not less than 3 hinges per door leaf for doors 86 inches or less in height with same rule for additional hinges.

2.4 LOCK CYLINDERS AND KEYING

A. Existing System: Grandmasterkey the locks to the Owner's existing system, with a new masterkey for the Project.

1. Locks to be factory keyed to the existing key system for Wake County.
2. Install final cores and turn keys over to Owner.

B. Equip locks with cylinders for interchangeable-core pin tumbler inserts. Furnish only temporary inserts for the construction period and remove these when directed.

C. Metals: Construct lock cylinder parts from brass or bronze, stainless steel, or nickel silver.

D. Comply with Owner's instructions for masterkeying and, except as otherwise indicated, provide individual change key for each lock that is not designated to be keyed alike with a group of related locks.

1. Permanently inscribe each key with number of lock that identifies cylinder manufacturer's key symbol, and notation, "DO NOT DUPLICATE."

E. Key Material: Provide keys of nickel silver only.

F. Key Quantity: Furnish 3 cylinder change keys for each lock, 5 master keys for each master system, 5 grandmaster keys for each grandmaster system, and 5 great-grand master keys.

1. Furnish one extra blank for each lock.
2. Deliver keys to Owner.

2.5 KEY CONTROL SYSTEM

A. Provide a key control system including envelopes, labels, tags with self-locking key clips, receipt forms, 3-way visible card index, temporary markers, permanent markers, and standard metal cabinet, all as recommended by system manufacturer, with capacity for 150 percent of the number of locks required for the Project.

1. Provide hinged-panel type cabinet for wall mounting.

2.6 LOCKS, LATCHES, AND BOLTS

A. Strikes: Provide manufacturer's standard wrought box strike for each latch or lock bolt, with curved lip extended to protect frame, finished to match hardware set, unless otherwise indicated.

1. Provide flat lip strikes for locks with 3-piece, antifriction latchbolts as recommended by manufacturer.

2. Provide recess type top strikes for bolts locking into head frames, unless otherwise indicated.

B. Lock Throw: Provide 5/8-inch minimum throw of latch on pairs of doors. Comply with UL requirements for throw of bolts and latch bolts on rated fire openings.

1. Provide 5/8-inch minimum throw of latch for other bored and preassembled types of locks and 5/8-inch minimum throw of latch for mortise locks. Provide 1-inch minimum throw for all dead bolts.

2.7 PUSH/PULL UNITS

A. Concealed Fasteners: Provide manufacturer's special concealed fastener system for installation, thru-bolted for matched pairs but not for single units.

2.8 CLOSERS AND DOOR CONTROL DEVICES

A. Size of Units: Except as otherwise specifically indicated, comply with the manufacturer's recommendations for size of door control unit depending on size of door, exposure to weather, and anticipated frequency of use.

1. Where parallel arms are indicated for closers, provide closer unit one size larger than recommended for use with standard arms.

B. Access-Free Manual Closers: Where manual closers are indicated for doors required to be accessible to the physically handicapped, provide adjustable units complying with Americans with Disabilities Act (ADA), "Accessibility Guidelines for Buildings and Facilities (ADAAG)," provisions for door opening force.

C. Provide grey resilient parts for exposed bumpers.

2.9 DOOR TRIM UNITS

A. Fasteners: Provide manufacturer's standard exposed fasteners for door trim units consisting of either machine screws or self-tapping screws.

B. Fabricate edge trim of stainless steel to fit door thickness in standard lengths or to match height of protection plates.

C. Fabricate protection plates not more than 2 inches less than door width on hinge side and not more than 2 inch less than door width on pull side by height indicated.

1. Metal Plates: Stainless steel, 0.050 inch (U.S. 18 gage).

2.10 WEATHERSTRIPPING AND SEALS

A. General: Provide continuous weatherstripping on exterior doors and smoke, light, or sound seals on interior doors where indicated or scheduled. Provide noncorrosive fasteners for exterior applications and elsewhere as indicated.

B. Replaceable Seal Strips: Provide only those units where resilient or flexible seal strip is easily replaceable and readily available from stocks maintained by manufacturer.

C. Weatherstripping at Jambs and Heads: Provide bumper-type resilient insert and metal retainer strips, surface applied unless shown as mortised or semi-mortised, and of following metal, finish, and resilient bumper material:

1. Extruded aluminum with natural anodized finish, 0.062-inch minimum thickness of main walls and flanges.

D. Weatherstripping at Door Bottoms: Provide threshold consisting of contact-type resilient insert and metal housing of design and size shown and of following metal, finish, and resilient seal strip:

1. Extruded aluminum with natural anodized finish, 0.062-inch minimum thickness of main walls and flanges.

2.11 THRESHOLDS

A. General: Except as otherwise indicated, provide standard metal threshold unit of type, size, and profile as shown or scheduled.

2.12 HARDWARE FINISHES

A. Match items to the manufacturer's standard color and texture finish for the latch and lock sets (or push-pull units if no latch or lock sets).

B. Provide finishes that match those established by BHMA.

C. The designations used in schedules and elsewhere to indicate hardware finishes are those listed in ANSI/BHMA A156.18, "Materials and Finishes," including coordination with the traditional U.S. finishes shown by certain manufacturers for their products.

D. Appearance of Finished Work: Variations in appearance of abutting or adjacent pieces are acceptable if they are within one-half of the range of approved Samples. Noticeable variations in the same piece are not acceptable. Variations in appearance of other components are acceptable if they are within the range of approved Samples and are assembled or installed to minimize contrast.

PART 3 - EXECUTION

3.1 EXAMINATION

B. Examine doors and frames, with Installer present, for compliance with requirements for installation tolerances, labeled fire-rated door assembly construction, wall and floor construction, and other conditions affecting performance.

C. Examine roughing-in for electrical power systems to verify actual locations of wiring connections before electrified door hardware installation.

D. Proceed with installation only after unsatisfactory conditions have been corrected.

3.2 PREPARATION

A. Steel Doors and Frames: For surface applied door hardware, drill and tap doors and frames according to ANSI/SDI A250.6.

B. Wood Doors: Comply with DHI WDHS.5 "Recommended Hardware Reinforcement Locations for Mineral Core Wood Flush Doors."

3.3 INSTALLATION

A. Mounting Heights: Mount door hardware units at heights to comply with the following unless otherwise indicated or required to comply with governing regulations.

1. Standard Steel Doors and Frames: ANSI/SDI A250.8.
2. Custom Steel Doors and Frames: HMMA 831.
3. Wood Doors: DHI WDHS.3, "Recommended Locations for Architectural Hardware for Wood Flush Doors."

B. Install each door hardware item to comply with manufacturer's written instructions. Where cutting and fitting are required to install door hardware onto or into surfaces that are later to be painted or finished in another way, coordinate removal, storage, and reinstallation of surface protective trim units with finishing work specified in Division 09 Sections. Do not install surface-mounted items until finishes have been completed on substrates involved.

1. Set units level, plumb, and true to line and location. Adjust and reinforce attachment substrates as necessary for proper installation and operation.
2. Drill and countersink units that are not factory prepared for anchorage fasteners. Space fasteners and anchors according to industry standards.

C. Retrofitting: Install door hardware to comply with manufacturer’s recommendations and published templates. Where cutting and fitting are required to install door hardware onto or into surfaces that are to be later painted or finished in another way, coordinate removal, storage, and reinstallation of surface protective trim units with finished work. Do not install surface-mounted items until finishes have been completed on substrates involved.

D. Hinges: Install types and in quantities indicated in door hardware schedule but not fewer than the number recommended by manufacturer for application indicated or one hinge for every 30 inches (750 mm) of door height, whichever is more stringent, unless other equivalent means of support for door, such as spring hinges or pivots, are provided.

E. Intermediate Offset Pivots: Where offset pivots are indicated, provide intermediate offset pivots in quantities indicated in door hardware schedule but not fewer than one intermediate offset pivot per door and one additional intermediate offset pivot for every 30 inches (750 mm) of door height greater than 90 inches (2286 mm).

F. Lock Cylinders: Install construction cores to secure building and areas during construction period.

1. Furnish permanent cores to Owner for installation.

G. Key Control System: Tag keys and place them on markers and hooks in key control system cabinet, as determined by final keying schedule.

H. Boxed Power Supplies: Locate power supplies as indicated or, if not indicated, above accessible ceilings. Verify location with Architect.

1. Configuration: Provide one power supply for each door opening with electrified door hardware.

I. Thresholds: Set thresholds for exterior doors and other doors indicated in full bed of sealant complying with requirements specified in Division 07 Section "Joint Sealants."

J. Stops: Provide floor stops for doors unless wall or other type stops are indicated in door hardware schedule. Do not mount floor stops where they will impede traffic.

K. Perimeter Gasketing: Apply to head and jamb, forming seal between door and frame.

L. Meeting Stile Gasketing: Fasten to meeting stiles, forming seal when doors are closed.

M. Door Bottoms: Apply to bottom of door, forming seal with threshold when door is closed.

3.4 ADJUSTING

A. Initial Adjustment: Adjust and check each operating item of door hardware and each door to ensure proper operation or function of every unit. Replace units that cannot be adjusted to operate as intended. Adjust door control devices to compensate for final operation of heating and ventilating equipment and to comply with referenced accessibility requirements.

1. Spring Hinges: Adjust to achieve positive latching when door is allowed to close freely from an open position of 30 degrees.
2. Electric Strikes: Adjust horizontal and vertical alignment of keeper to properly engage lock bolt.
3. Door Closers: Adjust sweep period to comply with accessibility requirements and requirements of authorities having jurisdiction.

B. Occupancy Adjustment: Approximately twelve months after date of Substantial Completion, Installer's Architectural Hardware Consultant shall examine and readjust each item of door hardware, including adjusting operating forces, as necessary to ensure function of doors, door hardware, and electrified door hardware.

3.5 CLEANING AND PROTECTION

A. Clean adjacent surfaces soiled by door hardware installation.

B. Clean operating items as necessary to restore proper function and finish.

C. Clean existing door hardware to remain and check operation. Notify architect if any issues with operation are identified.

D. Provide final protection and maintain conditions that ensure that door hardware is without damage or deterioration at time of Substantial Completion.

3.6 DEMONSTRATION

A. Engage a factory-authorized service representative to train Owner's maintenance personnel to adjust, operate, and maintain door hardware and door hardware finishes. Refer to Division 01 Section "Demonstration and Training."

END OF SECTION 087100

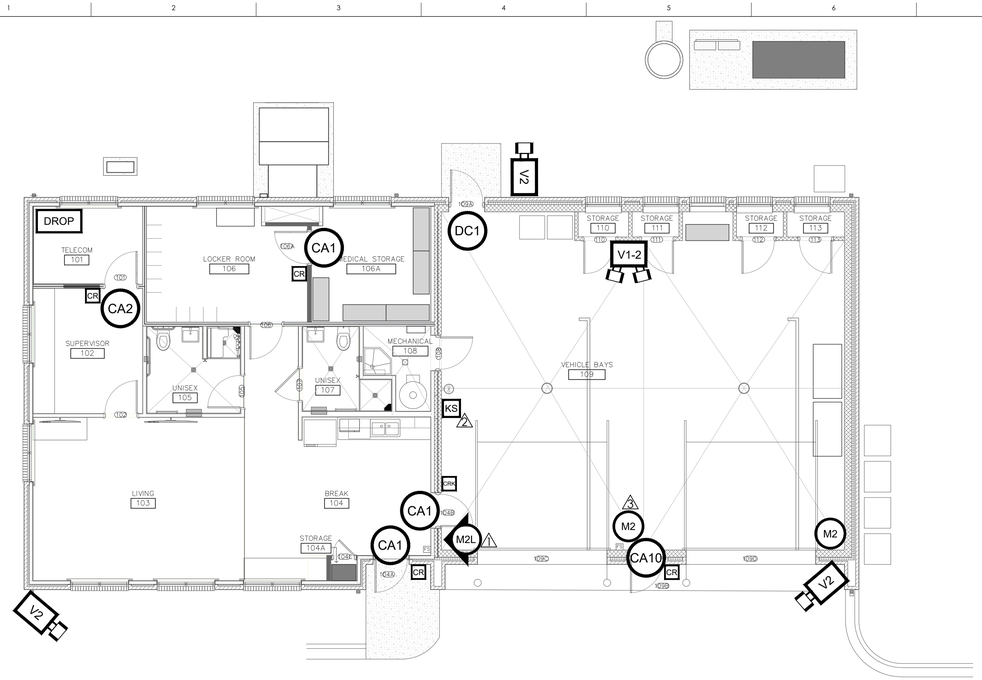

EAST RALEIGH | STATION 7
NTS

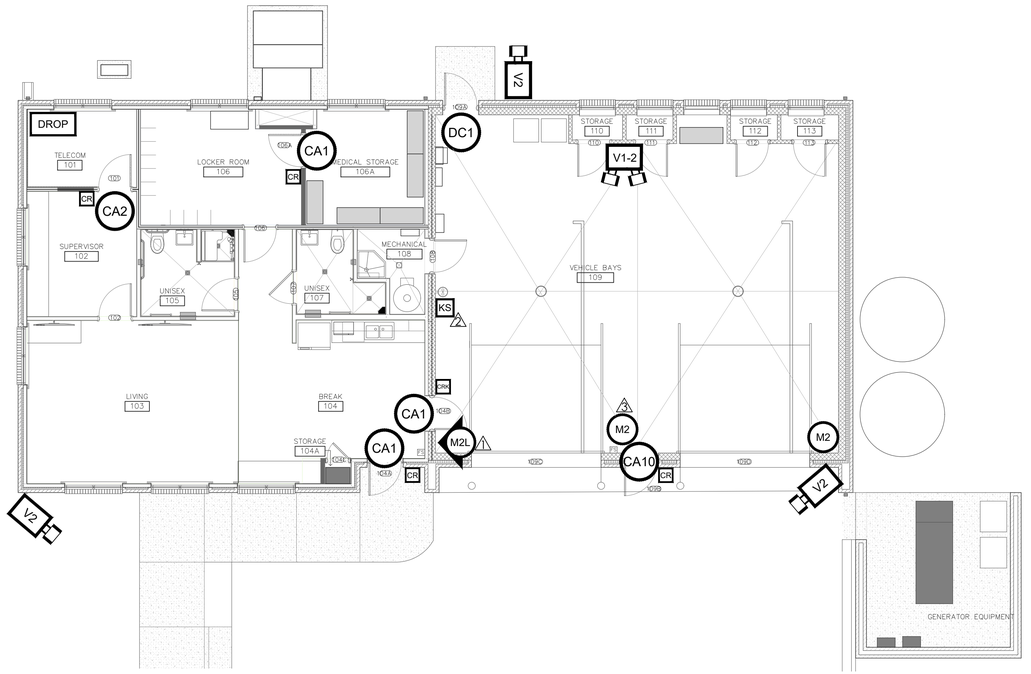

NCSU | STATION 8
NTS

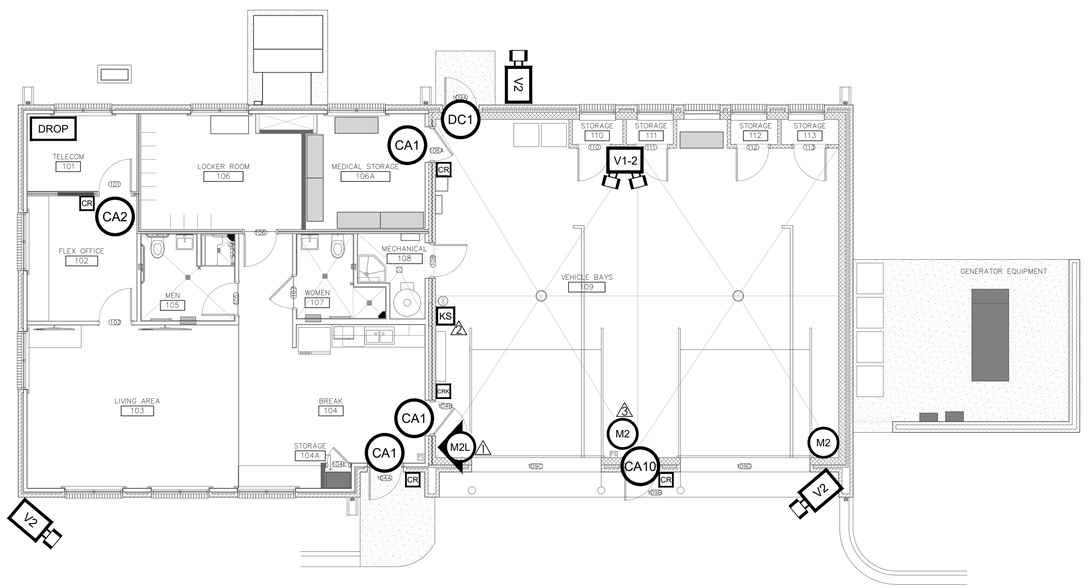

WAKE FOREST | STATION 10
NTS

protus3

5540 Centerview Drive
SUITE 214
RALEIGH, NC 27606

www.Protus3.com

T 919.834.8584
F 919.864.8150

©COPYRIGHT 2026 RISK MANAGEMENT ASSOCIATES (RMA)
THIS DRAWING IS THE PROPERTY OF RMA AND MAY NOT BE USED, REPRODUCED, OR DISTRIBUTED WITHOUT WRITTEN PERMISSION.

LEGEND

- V2 — Fixed Wall Mount Camera
- V1-2 — Fixed Wall Mount Duo Cameras
- CA# — Card Access
- DC# — Door Contact
- MM — Motion Detector
- CR — Card Reader
- CRK — Card Reader w/ Keypad
- KS — Keyswitch
- DROP — Panel Location

SHEET NOTE

1. Coordinate exact location of motion detectors with other construction trades so that motion field of view in not blocked. To be mounted per manufacturers recommended height for maximum coverage.
2. Coordinate exact location of overhead door keyswitch override with other construction trades.
3. Mount Motion Detector over Door.

No.	Date	Description

WAKE COUNTY EXISTING EMS STATION REVONATIONS

STATION #7 : 2910 KIDD ROAD, RALEIGH, NC
STATION #8 : 1361 VARSITY DRIVE, RALEIGH, NC
STATION #10 : 706 S FRANKLIN STREET, WAKE FOREST, NC

BID DOCUMENTS

SECURITY RENOVATION

FLOOR PLANS

DATE August 17, 2026
SCALE NTS
DRAWN EKS
PROJ. NO. WAKD178

SHEET **SC-01**

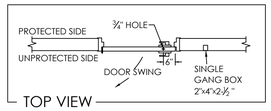

TOP VIEW

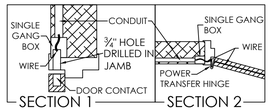

SECTION 1 SECTION 2

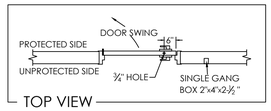

TOP VIEW

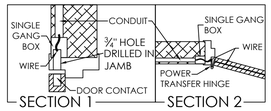

SECTION 1 SECTION 2

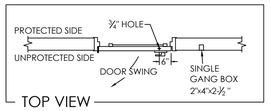

TOP VIEW

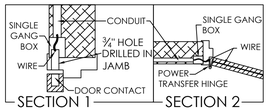

SECTION 1 SECTION 2

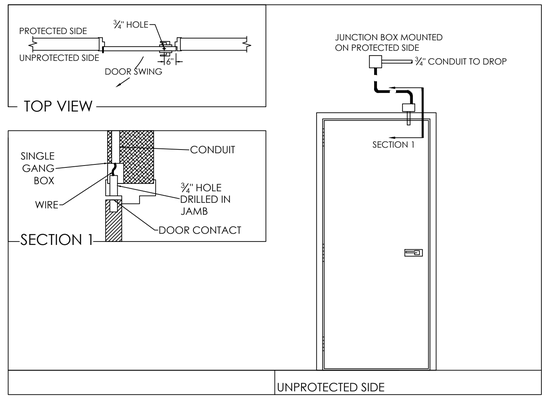

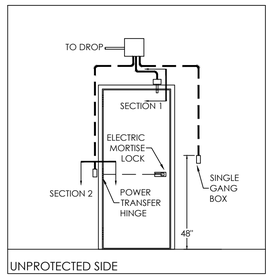

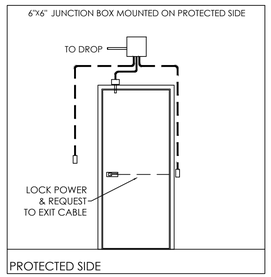

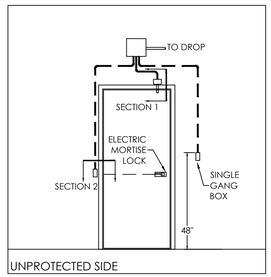

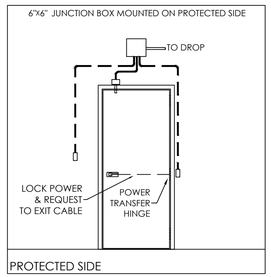

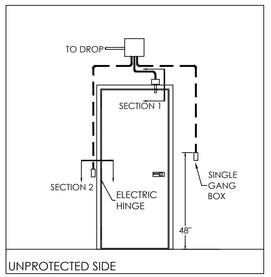

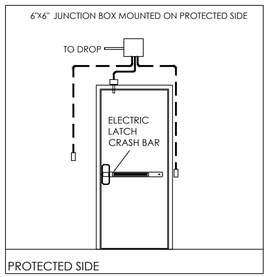

CA1 CARD ACCESS SINGLE DOOR, MORTISE LOCK, SWING TO UNPROTECTED SIDE
NOT TO SCALE

CA2 CARD ACCESS SINGLE DOOR, MORTISE LOCK, SWING TO PROTECTED SIDE
NOT TO SCALE

CA10 CARD ACCESS SINGLE DOOR, EXIT DEVICE, SWING TO UNPROTECTED SIDE
NOT TO SCALE

DC1 SINGLE DOOR CONTACT
NOT TO SCALE

NOTES:
FLUSH MOUNT BOX PROVIDED BY SECURITY CONTRACTOR.

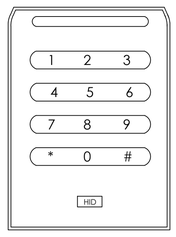



FRONT VIEW : HID Signo 40KNKS

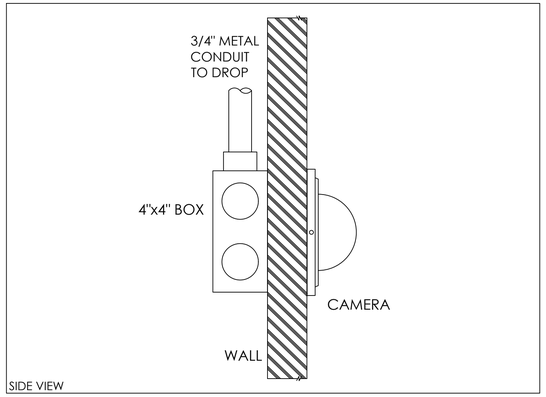

SIDE VIEW

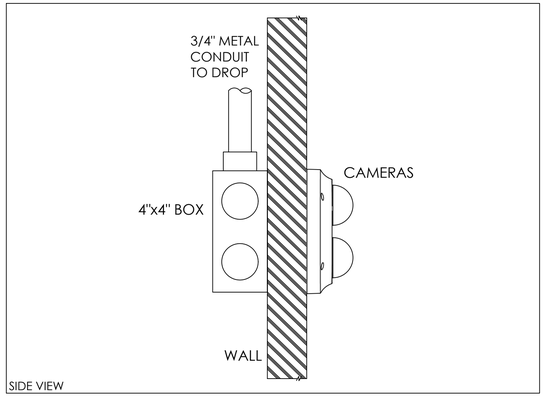

SIDE VIEW

NOTES:
1. BOX TO BE SPOTTED IN FIELD EXACT LOCATION.
2. OVERHEAD DOOR INTERLOCK ONLY. NOT A SECURITY DEVICE.

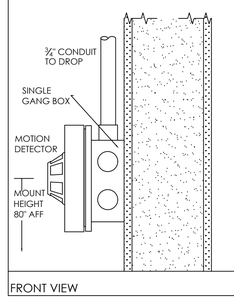

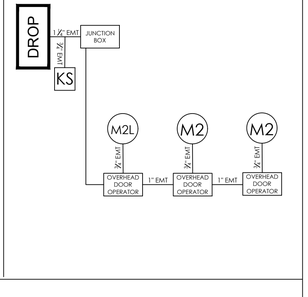

FRONT VIEW

CRK HID Keypad & Card Reader
NOT TO SCALE

V2 WALL MOUNT FIXED CAMERA
NOT TO SCALE

V1-2 FIXED WALL MOUNT CAMERA
NOT TO SCALE

M2 WALL MOUNT MOTION DETECTOR
NOT TO SCALE

NOTES:
1. KEY SWITCHES BE MOMENTARY UNLOCKING AND KEY SHALL NOT BE CAPABLE OF BEING REMOVED FROM CYLINDER WHEN IN THE POSITION.
2. ALL KEY SWITCHES SHALL BE DPDT WITH A MINIMUM CONTACT RATING OF 2AMPS AT 30V DC.
3. KEY SWITCH FACE PLATE SHALL BE STAINLESS STEEL.
4. KEY SWITCH SHALL BE EQUIPPED WITH STATUS LED; WHERE GREEN REPRESENTS UNLOCK CONDITION AND RED REPRESENTS LOCKED POSITION.

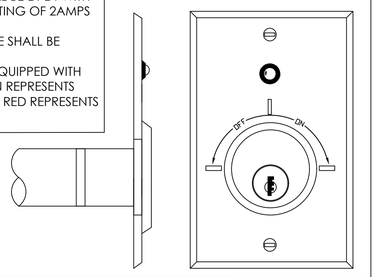

KS KEYSWITCH OVERRIDE
NOT TO SCALE

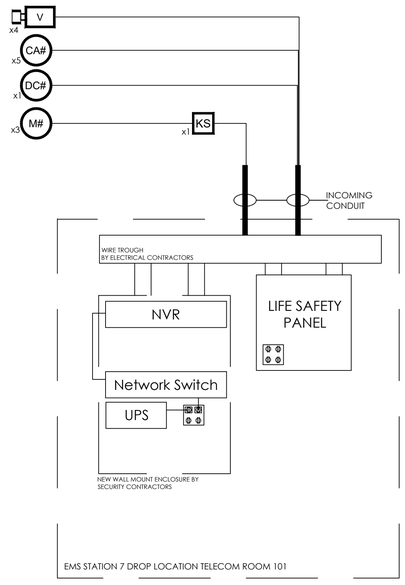

EMS STATION 7 DROP LOCATION TELECOM ROOM 101

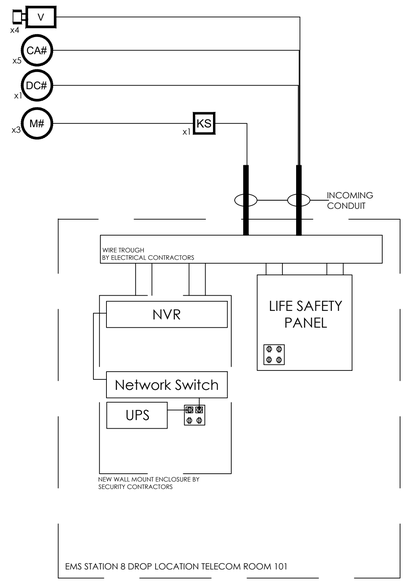

EMS STATION 8 DROP LOCATION TELECOM ROOM 101

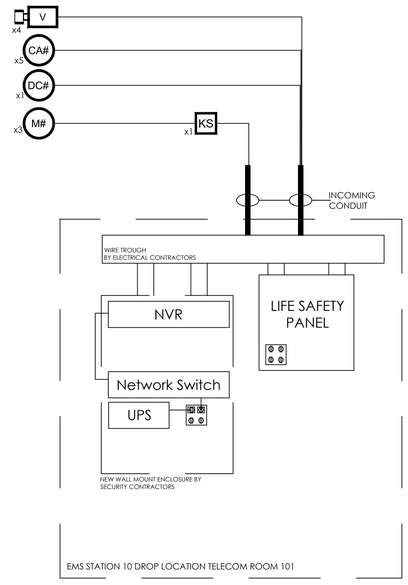

EMS STATION 10 DROP LOCATION TELECOM ROOM 101

protus3
5540 Centerview Drive, SUITE 214, RALEIGH, NC 27606
www.protus3.com
T 919.834.8584
F 919.864.8150

©COPYRIGHT 2026 RISK MANAGEMENT ASSOCIATES (RMA)
THIS DRAWING IS THE PROPERTY OF RMA AND MAY NOT BE USED, REPRODUCED, OR DISTRIBUTED WITHOUT WRITTEN PERMISSION.

No.	Date	Description

WAKE COUNTY
EXISTING EMS STATION
REVONATIONS

STATION #7 : 2910 KIDD ROAD, RALEIGH, NC
STATION #8 : 1361 VARSITY DRIVE, RALEIGH, NC
STATION #10 : 706 S FRANKLIN STREET, WAKE FOREST, NC

BID DOCUMENTS

SECURITY RENOVATION

SECURITY DETAILS & RISER DIAGRAM

DATE August 10, 2026
SCALE NTS
DRAWN EKS
PROJ. NO. WAKD178
SHEET **SC-02**

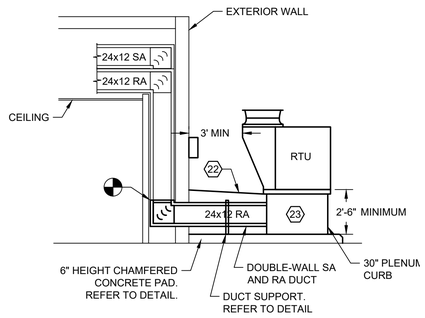

2 RTU SECTION

SCALE: 1/4" = 1'-0"

0' 2' 4' 8'

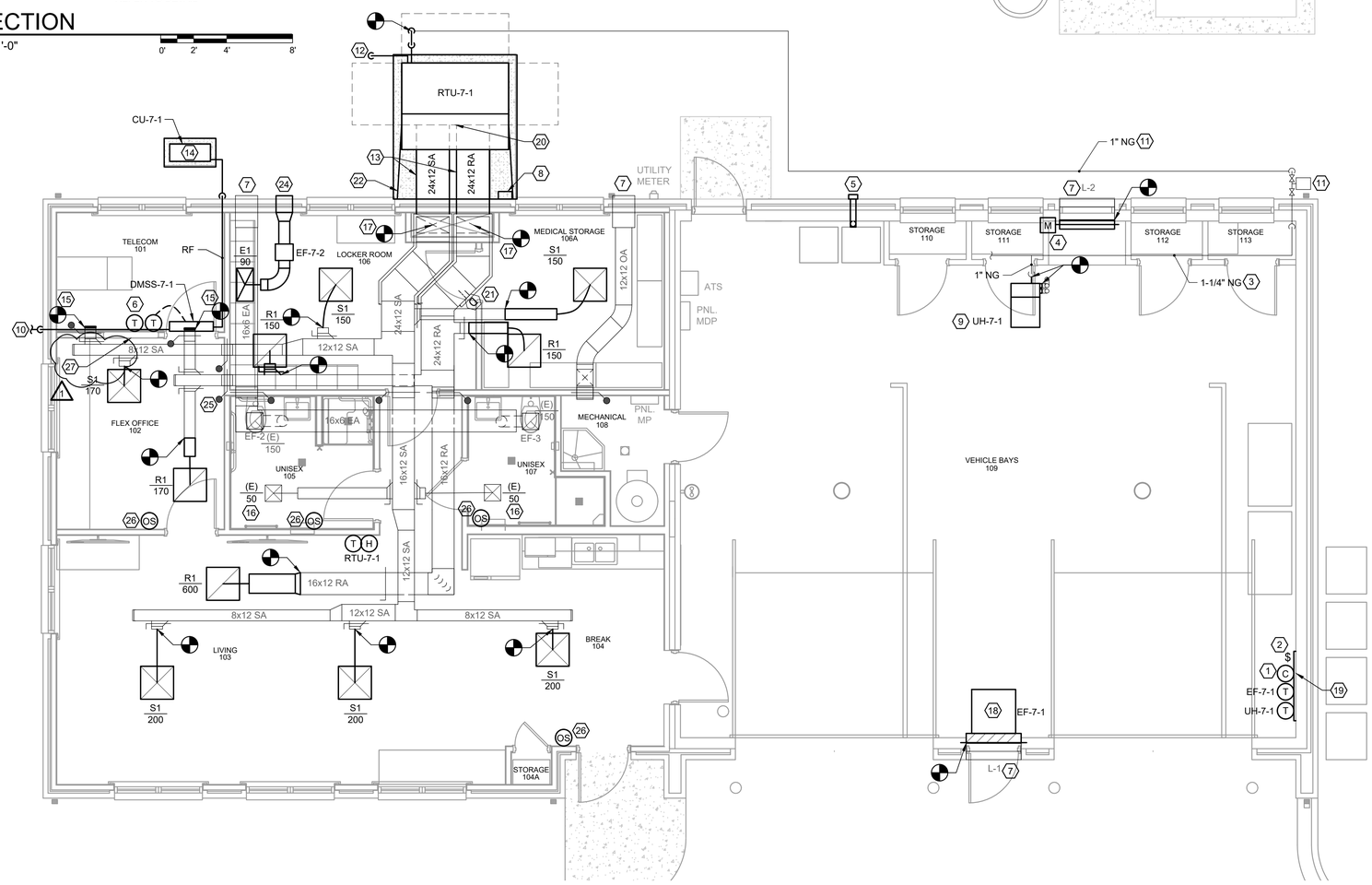

1 MECHANICAL NEW WORK

SCALE: 1/4" = 1'-0"

0' 2' 4' 8'

GENERAL NOTES

1. PROVIDE ALL SENSORS, DETECTORS, THERMOSTATS LOCATED IN THE VEHICLE BAY WITH WIRE GUARDS.
2. COMPLETE CLEANING OF AIR DISTRIBUTION SYSTEM PRIOR TO INSTALLATION OF NEW DUCTWORK AND DIFFUSERS. CLEAN IN ACCORDANCE WITH SPECIFICATION 233100.
3. FOUR WALL-MOUNTED OCCUPANCY SENSORS SHOWN FOR RTU OPERATION. SEE CONTROL SEQUENCE.
4. PROJECT IS SEISMIC DESIGN CATEGORY C AND WILL REQUIRE DELEGATED DESIGN FOR SEISMIC, WIND AND VIBRATION CONTROLS. REFER TO SPECIFICATION 230548 - HVAC SEISMIC, WIND AND VIBRATION CONTROLS.

KEY NOTES (#)

1. PROVIDE MACURCO CX-12 DUAL DETECTION CO/NO2 GAS DETECTOR (OR EQUAL) WITH REPLACEABLE SENSOR MODULES AND INTERLOCK WITH EF-7-1. REFER TO CONTROLS WIRING DIAGRAM.
2. PROVIDE TIMED OVERRIDE SWITCH AND INTERLOCK WITH EF-7-1.
3. EXISTING NG PIPING LOCATED 12' AFF WITHIN VEHICLE BAY.
4. PROVIDE MOTORIZED DAMPER AND INTERLOCK WITH EF-7-1 FAN STARTER. FIELD VERIFY LOUVER AND DUCT SIZE.
5. 4"Ø HOODED ALUMINUM WALL CAP WITH BACKDRAFT DAMPER. COORDINATE WITH DRYER LOCATION. BOTTOM OF DISCHARGE SHALL BE 24 INCHES OR MORE ABOVE FINISHED GRADE. PROVIDE 4" DIAMETER DRYER DUCT. DUCT SHALL BE SMOOTH SURFACE ALUMINUM.
6. PROVIDE SCHNEIDER SE8650 THERMOSTAT ADJACENT TO DMSS-7-1 THERMOSTAT FOR CONNECTION TO OWNER'S BAS SYSTEM. SE8650 THERMOSTAT WILL BE USED FOR TEMPERATURE MONITORING ONLY, NOT CONTROL OF THE DMSS.
7. EXISTING WALL CAP TO REMAIN.
8. RTU FUSED DISCONNECT.
9. PROVIDE NEW UNIT HEATER IN SAME LOCATION AS EXISTING. REUSE NATURAL GAS PIPING, COMBUSTION AND FLUE PIPE AS POSSIBLE FOR RECONNECTION TO NEW UNIT. PROVIDE THERMOSTAT AS SPECIFIED.
10. ROUTE ¾" CONDENSATE TO GROUND. PROVIDE WALL SUPPORT. TERMINATE CONDENSATE 12" ABOVE GROUND. PROVIDE CONCRETE SPLASHBLOCK.
11. EXISTING 1" BURIED NATURAL GAS PIPE. EXISTING GAS METER DELIVERS 7" WC PRESSURE. COORDINATE WITH UTILITY TO INCREASE DELIVERY PRESSURE TO 10" WC. CONFIRM EXISTING PIPE SIZE AND MATERIAL PRIOR TO RECONNECTION AND COORDINATE WITH ENGINEER/OWNER IF DIFFERENT.
12. DISCHARGE RTU CONDENSATE INTO EXISTING DRYWELL. CONFIRM DRYWELL LOCATION IN FIELD. NOTIFY OWNER/ENGINEER IF IT CANNOT BE LOCATED.
13. DOUBLE WALL DUCT.
14. CONDENSING UNIT WITH CONCRETE PAD. REFER TO CONDENSING UNIT DETAIL.
15. CAP, INSULATE AND SEAL DUCT.
16. REBALANCE EXISTING DIFFUSERS AS INDICATED.
17. SEE RTU SECTION DETAIL.
18. VEHICLE BAY EXHAUST FAN. REFER TO EXHAUST FAN DETAIL.
19. PROVIDE INSULATED BACK PANEL FOR VEHICLE BAY SENSORS.
20. MAINTAIN MINIMUM 6" SEPARATION BETWEEN DUCT PENETRATIONS INTO PLENUM CURB.
21. DUCT DETECTOR EXISTING TO REMAIN.
22. FIELD FABRICATED ALUMINUM DUCT ENCLOSURE WITH 18"X18" SIDE ACCESS DOOR. CROWN DUCT ENCLOSURE AT THE TOP SO THAT WATER SHEDS TO BOTH SIDES. SECURE TO EXISTING BRICK WALL WITH COUNTER FLASHING FRAME FASTENED TO THE BRICKWORK. INSTALL WEATHERPROOF SEALANT AND PATCH EXISTING WALL AS NEEDED. COORDINATE WITH ARCHITECT FOR MORE DETAIL ON WALL CONNECTION.
23. 30" PLENUM CURB. RETURN DUCT TO PENETRATE PLENUM CURB AND USE PLENUM CURB AS RETURN AIR PLENUM. SUPPLY AIR TO BE DIRECTLY DUCTED INTO RTU SUPPLY CONNECTION. PLENUM SHALL BE CONSTRUCTED WITH DIVIDER MID-WAY, BETWEEN SUPPLY AND RETURN PATH. DUCT CONNECTIONS TO CURB SHALL BE WATER TIGHT. SUPPLY DUCT INSULATION TO CONTINUE UNTIL RTU SUPPLY CONNECTION.
24. 12"x12" EXHAUST LOUVER. SEE ARCHITECTURAL PLANS FOR DETAIL.
25. EXISTING FIRE DAMPER. SEE ARCHITECTURAL PLANS FOR WALL RATINGS (TYP.).
26. PROVIDE WALL MOUNTED OCCUPANCY SENSOR.
27. REFRIGERANT CHARGE NATURAL VENTILATION OPENING: 12" X 12" WALL MOUNTED LOUVER AT A MAXIMUM OF 12" AFF TO THE BOTTOM OF THE LOUVER.

1

NO.	DESCRIPTION	DATE
1	Addendum No. 2	9/10/26

NORTH CAROLINA PROFESSIONAL SEAL 061185 ENGINEER AVI C. CAMPBELL 9/9/26

Dewberry
Dewberry Engineers Inc.
2010 Wyndff Road
Suite 410
Raleigh, NC 27607-3073
919.881.7300
NC License No. F-0929

DRAWN BY: VALUE
CHECKED BY: VALUE
APPROVED BY: VALUE

WILLIARD STEWART ARCHITECTS
122 COX AVENUE
RALEIGH, NC 27605
TEL: [919] 834.0620
FAX: [919] 834.2149
williardstewartarchitects.com

WAKE COUNTY
EAST RALEIGH / KIDD ROAD | STATION 7
2910 KIDD ROAD
RALEIGH, NORTH CAROLINA 27610
OWNER: WAKE COUNTY FACILITIES
DESIGN & CONSTRUCTION

PROJECT NUMBER: 50192457-01

CONSTRUCTION DOCUMENTS

DRAWING TITLE:
MECHANICAL NEW WORK

SHEET:
01-M111

DATE
7/31/2026

RTU SCHEDULE

MARK	SERVICE	TYPE	MANUFACTURER / MODEL	SUPPLY AIR FAN				OUTSIDE AIR INTAKE	COOLING SECTION						HOT GAS REHEAT			HEATING SECTION			GAS					HEAT PUMP			FILTRATION		ELECTRICAL			DIMENSIONS AND WEIGHT			NOTES
				TYPE	COOLING AIR FLOW (CFM)	HEATING AIR FLOW (CFM)	ESP (IN WG)	AIR FLOW (CFM)	EAT (Fdb/Fwb)	LAT (Fdb/Fwb)	TOTAL CAPACITY (MBH)	SENSIBLE CAPACITY (MBH)	IEER / ISMRE2	AMB. (F)	EAT (F)	LAT (F)	CAPACITY (MBH)	EAT (F)	LAT (F)	CAPACITY (MBH)	INPUT (MBH)	OUTPUT (MBH)	MAX OUTPUT (MBH)	EFF. (%)	REQD INPUT PRESS (IN. W.C.)	CAPACITY (MBH)	COP	AMB. (F)	TYPE & THICKNESS	EFF. (MERV)	MCA (A)	MOCP (A)	VOLTAGE/ PHASE	FOOTPRINT (IN x IN)	HEIGHT (IN)	WEIGHT (LBS)	
RTU-7-1	NC STATE - STATION 7	PACKAGED UNIT	CAPTIVEAIRE / PARAGON	PLENUM	1,170	1,170	1.25	440	82.5 / 67.7	53.5 / 53.0	60.0	40.0	17.9 / 6.4	95.0	53.0	75.1	28.4	53.0	85.0	45.0	16.9	13.7	52.0	81%	7 - 14	31.3	3.5	18.0	2" PLEATED PANEL	13	54	60	240/1	74 x 64	58	1,356	1,2,3,4,5,6,7,8,9,10,11,12,13

NOTES:
1. REFER TO SECTION 236213 FOR ADDITIONAL REQUIREMENTS. REFER TO UNIT DETAILS AND DIAGRAMS FOR COMPLETE CONFIGURATION AND DIMENSIONAL DETAILS.
2. MAX. COOLING COIL FACE VELOCITY = 500 FPM.
3. PROVIDE SINGLE-POINT ELECTRICAL CONNECTION AND FUSED-DISCONNECT SWITCH.
4. COILS APD'S ARE BASED ON THE MAX. SUPPLY FAN AIRFLOW.
5. PROVIDE NEW CONCRETE PAD THAT IS 6-INCHES LONGER AND WIDER THAN UNIT FOOTPRINT AND 6-INCHES DEEP WITH 4-INCHES DEEP CRUSHED STONE BASE. REFER TO DETAIL.
6. PROVIDE WITH MODULATING HOT GAS REHEAT COIL, HAIL GUARDS, 2" CLOSE CELL FOAM PANEL INSULATION AND DOUBLE WALLED CASING.
7. BOTTOM DISCHARGE CONFIGURATION. PROVIDE MIMIMUM 30 INCH HEIGHT DUCT CURB. PROVIDE 2-INCH R-10 CURB INSULATION. PROVIDE WITH SOLID METAL INTERIOR LINER. PROVIDE SEPARATION PANEL BETWEEN SUPPLY AND RETURN AIR PATH.
8. PROVIDE WITH GAS AUXILIARY / EMERGENCY HEAT STAINLESS STEEL HIGH EFFICEINCY FURNACE HEAT EXCHANGER WITH MODULATING OR STEP CONTROLLER.
9. PROVIDE MODULATING COMPRESSOR.
10. PROVIDE PACKAGE UNIT CONTROLLER WITH AUXILIARY RELAY TO START RESTROOM EXHAUST FANS BASED ON OCCUPANCY.
11. PROVIDE WITH BACNET IP CARD.
12. PROVIDE WITH HAIL GUARD.
13. PROJECT IS SEISMIC DESIGN CATEGORY C AND WILL REQUIRE DELEGATED DESIGN FOR SEISMIC, WIND AND VIBRATION CONTROLS. PROVIDE UNIT SPECIFIC SEISMIC, WIND AND VIBRATION CONTROLS AS NEEDED.

DUCTLESS MINI-SPLIT UNIT SCHEDULE

MARK (INDOOR UNIT)	MARK (OUTDOOR UNIT)	SERVICE	TYPE	MANUFACTURER / MODEL	REFRIG.	MAXIMUM REFRIG. CHARGE	COOLING				HEAT PUMP			ELECTRICAL - OUTDOOR UNIT			MAX. EQUIV. PIPE LENGTHS		DIMENSIONS AND WEIGHT - OUTDOOR			NOTES
				INDOOR & OUTDOOR	TYPE	(LBS)	TOT. CAP. (MBH)	SENS. CAP. (MBH)	SEER2/EER2 (BTUH/W)	AMB. (F)	CAPACITY (MBH)	HSPF/ COP	AMB. (F)	MCA (A)	MOCP (A)	VOLTAGE/ PHASE	HEIGHT (FT)	LENGTH (FT)	FOOTPRINT (IN x IN)	HEIGHT (IN)	WEIGHT (LBS)	
DMSS-7-1	CU-7-1	TELECOM 101	WALL MOUNTED / HEAT PUMP	MITSUBISHI / PKA & PUZ 1.5 TON	R-454B	4.5	18.0	10.8	19.5/11	95	11.7	8.9 / 2.4	17	16	27	240/1	100	100	34 x 11	24	100	1,2,3,4,5,6,7,8,9

NOTES:
1. REFER TO SECTION 238116 FOR ADDITIONAL REQUIREMENTS.
2. SOUND PERFORMANCE IS BASED ON SOUND PRESSURE LEVELS MEASURED AT 3 FEET FROM UNIT AT FULL CAPACITY IN ACCORDANCE WITH AHRI 270 AND 350.
3. ALL UNITS SHALL MEET OR EXCEED SEASONAL ENERGY EFFICIENCY RATIO (SEER).
4. SIZE REFRIGERANT PIPING PER MANUFACTURER'S RECOMMENDATIONS.
5. PROVIDE SINGLE-POINT POWER CONNECTION. PROVIDE FUSED-DISCONNECT SWITCH FOR OUTDOOR UNIT. PROVIDE MOTOR-RATED DISCONNECT SWITCH FOR INDOOR UNIT.
6. PROVIDE WITH WIND BAFFLES AND LOW AMBIENT OPTION TO ENABLE COOLING DOWN TO 20°F OAT.
7. PROVIDE WIRED THERMOSTAT / TEMPERATURE SENSOR AS INDICATED. WIRELESS REMOTE CONTROLS ARE NOT ACCEPTABLE.
8. CONDENSING UNIT COIL SHALL BE COPPER TUBING.
9. PROVIDE WITH REFRIGERANT LEAK MITIGATION. (1)

FAN SCHEDULE

MARK	SERVICE	TYPE	MANUFACTURER / MODEL	AIR FLOW (CFM)	ESP (IN WG)	EC MOTOR (Y or N)	DRIVE TYPE	SPEED (RPM)	BRAKE MOTOR (HP)	NOMINAL MOTOR (HP)	MAX. SOUND (SONES)	DAMPER TYPE	FLA (A)	MCA (A)	MOCP (A)	VOLTAGE/ PHASE	STARTER/ DSCNNCT MEANS	NOTES
EF-7-1	STATION 7 VEHICLE BAY	PROPELLER WALL FAN	GREENHECK / BAER	2,800	0.40	NO	BELT	1571	0.81	1.00	31	GRAVITY	16	20	35	120/1	MRS	1,2,3,4,5,6,7
EF-7-2	STATION 7 LOCKER ROOM	IN-LINE CABINET	GREENHECK / SQ-70	90	0.30	NO	DIRECT	1442	0.02	1/15	4	GRAVITY	1.3	1.6	15	120/1	MRS	1,2,4,8

NOTES:
1. REFER TO SECTION 233400 FOR ADDITIONAL REQUIREMENTS.
2. PROVIDE STARTING AND DISCONNECTING MEANS AS SCHEDULED. (MRS = MOTOR RATED SWITCH)
3. PROVIDE CARBON MONOXIDE AND NITROGEN DIOXIDE DETECTORS. ACTIVATE FAN UPON DETECTION OF CARBON MONOXIDE OR NITROGEN DIOXIDE EXCEEDING 25PPM.
4. PROVIDE HANGING BRACKETS WITH VIBRATION ISOLATION.
5. PROVIDE WALL MOUNTED PUSHBUTTON TIMER SWITCH FOR EXHAUST FANS INTERLOCKED WITH GAS DETECTOR.
6. PROVIDE WALL COLLAR WITH MOTOR SIDE OSHA APPROVED GUARD.
7. PROVIDE FACTORY MOUNTED MOTOR ACCESSIBLE BETWEEN OCCUPIED SPACE AND FAN BLADES.
8. PROVIDE SPEED CONTROL.

AIR DISTRIBUTION SCHEDULE

MARK	SERVICE	TYPE	MANUFACTURER / SERIES	MATERIAL	COLOR	PATTERN	MAX. AIR FLOW (CFM)	FACE SIZE (IN x IN)	NECK SIZE (IN x IN)	APD (IN WG)	MAX. SOUND (NC)	NOTES
S1	SUPPLY	SQUARE PERFORATED FACE	TITUS PSS-AA	ALUMINUM	WHITE	4-WAY	100	24 x 24	6	0.10	25	1-4
							200		8	0.10		
R1 / E1	RETURN/EXHAUST	SQUARE PERFORATED FACE	TITUS PAR-AA	ALUMINUM	WHITE	N/A	200	24 x 24	8	0.10	20	1-4
							325	24 x 24	10	0.10		
							450	24 x 24	12	0.10		
							600	24 x 24	14	0.10		
(E)	EXISTING DIFFUSER BALANCE TO AIRFLOW INDICATED.											

NOTES:
1. REFER TO SECTION 233713 FOR ADDITIONAL REQUIREMENTS.
2. SOUND LEVELS SHALL BE BASED ON ASHRAE 70.
3. VERIFY MOUNTING FRAME STYLE WITH ARCHITECTURAL REFLECTED CEILING PLANS, FINISH SCHEDULES AND EXISTING CEILINGS.
4. DUCT BRANCH FROM MAIN TAKEOFF TO AIR INLET / OUTLET SHALL MATCH SCHEDULED NECK SIZE UNLESS OTHERWISE NOTED.

UNIT HEATER SCHEDULE

MARK	SERVICE	TYPE	MANUFACTURER / MODEL	FAN			FUEL-FIRED						NOTES
				AIR FLOW (CFM)	MOTOR (HP)	VOLTAGE/ PHASE	EAT (F)	LAT (F)	FUEL TYPE	INPUT (MBH)	OUTPUT (MBH)	EFF. (%)	
UH-7-1	VEHICLE BAY	HORIZONTAL UNIT HEATER	MODINE / HDS	1490	1/6	240/1	55	105	NAT. GAS	100.0	82.0	82%	1,2,3,4,5

NOTES:
1. REFER TO SECTION 238239 FOR ADDITIONAL REQUIREMENTS.
2. PROVIDE MOTOR-RATED DISCONNECT SWITCH.
3. PROVIDE FACTORY-FABRICATED WALL/CEILING SUPPORT.
4. PROVIDE WITH LINE-VOLTAGE THERMOSTAT WITH FAN AUTO OR ON SELECTION SWITCH.
5. PROVIDE FLUE AND COMBUSTION AIR DUCT.

DMSS-7-1 REFRIGERANT CALCULATIONS

MAXIMUM REFRIGERANT CHARGE CALCULATION

UNIT INFO			REFRIGERANT DATA			TOTAL	MAXIMUM	ROOM INFO				
UNIT TAG	RELEASABLE LBS	OCCUPANCY CLASSIFICATION	REFREIGERANT TYPE	SAFETY GROUP	RCL (LB/1000 CUFT)	VOLUME (CUFT)	ALLOWABLE QUANTITY RCL (LBS)	NUMBER	NAME	AREA (SQFT)	HEIGHT (FT)	VOLUME (CUFT)
								1	TELECOM	77	8	616
								2	OFFICE	118	8	944
TELECOM DMSS	4.375	COMMERCIAL	R-454B	A2L	3.1	1560	4.836					

NOTE: SEE "NATURAL VENTILATION OPENING FOR GROUP A2L REFRIGERANTS (ASHRAE 15-2022 7.2.3.2.2)" CALCULATION FOR THE METHOD OF CLASSIFYING THE ADJACENT FLEX OFFICE AS A CONNECTING SPACE VIA NATURAL VENTILATION.

NATURAL VENTILATION OPENING FOR GROUP A2L REFRIGERANTS (ASHRAE 15-2022 7.2.3.2.2)

UNIT INFO			REFRIGERANT DATA				TELECOM ROOM INFO				MINIMUM VENTILATION
UNIT TAG	RELEASABLE QTY (m,rel)	MAXIMUM ALLOWABLE QTY IN TELECOM ROOM ALONE (m,room)	REFREIGERANT TYPE	SAFETY GROUP	LFL (LB/1000 CUFT)	MOLAR MASS (M)	NAME	AREA (SQFT)	HEIGHT (FT)	VOLUME (CUFT)	OPENING AREA (A,vent) (sq ft)
TELECOM DMSS	4.375	1.9096	R-454B	A2L	22	62.6	TELECOM	77	8	616	0.410

NOTE: USING THE NATURAL VENTILATION OPENING FOR A2L REFRIGERANT EQUATION IN ASHRAE 15-2022 IN SECTION 7.2.3.2.2, WE CALCULATE THE MINIMUM VENTILATION OPENING SIZE OF A LOUVER CONNECTING THE TELECOM ROOM AND ADJACENT OFFICE TO BE ABLE TO UTILIZE ITS AREA AS A CONNECTED SPACE IN OUR MAXIMUM ALLOWABLE VOLUME CALCULATIONS.

(1)

NO.	DESCRIPTION	DATE
1	Addendum No. 2	9/10/26

NORTH CAROLINA PROFESSIONAL SEAL 061783 ENGINEER AVA C. CAMPBELL 9/9/26

Dewberry
Dewberry Engineers Inc.
2610 Wycliff Road
Suite 410
Raleigh, NC 27607-3073
(919) 881-3000
NC License No. F-0929

DRAWN BY: VALUE
CHECKED BY: VALUE
APPROVED BY: VALUE

WILLIARD STEWART ARCHITECTS
122 COX AVENUE
RALEIGH, NC 27605
TEL: [919] 834.0620
FAX: [919] 834.2149
williardstewartarchitects.com

WAKE COUNTY
EAST RALEIGH / KIDD ROAD I
STATION 7
2910 KIDD ROAD
RALEIGH, NORTH CAROLINA 27610
OWNER: WAKE COUNTY FACILITIES
DESIGN & CONSTRUCTION
PROJECT NUMBER: 50192457-01

CONSTRUCTION DOCUMENTS

DRAWING TITLE: SCHEDULES

SHEET: 01-M601

DATE 7/31/2026

Docusign Envelope ID: CB6C5267-59C8-8210-83F8-67F5ADC9CE86

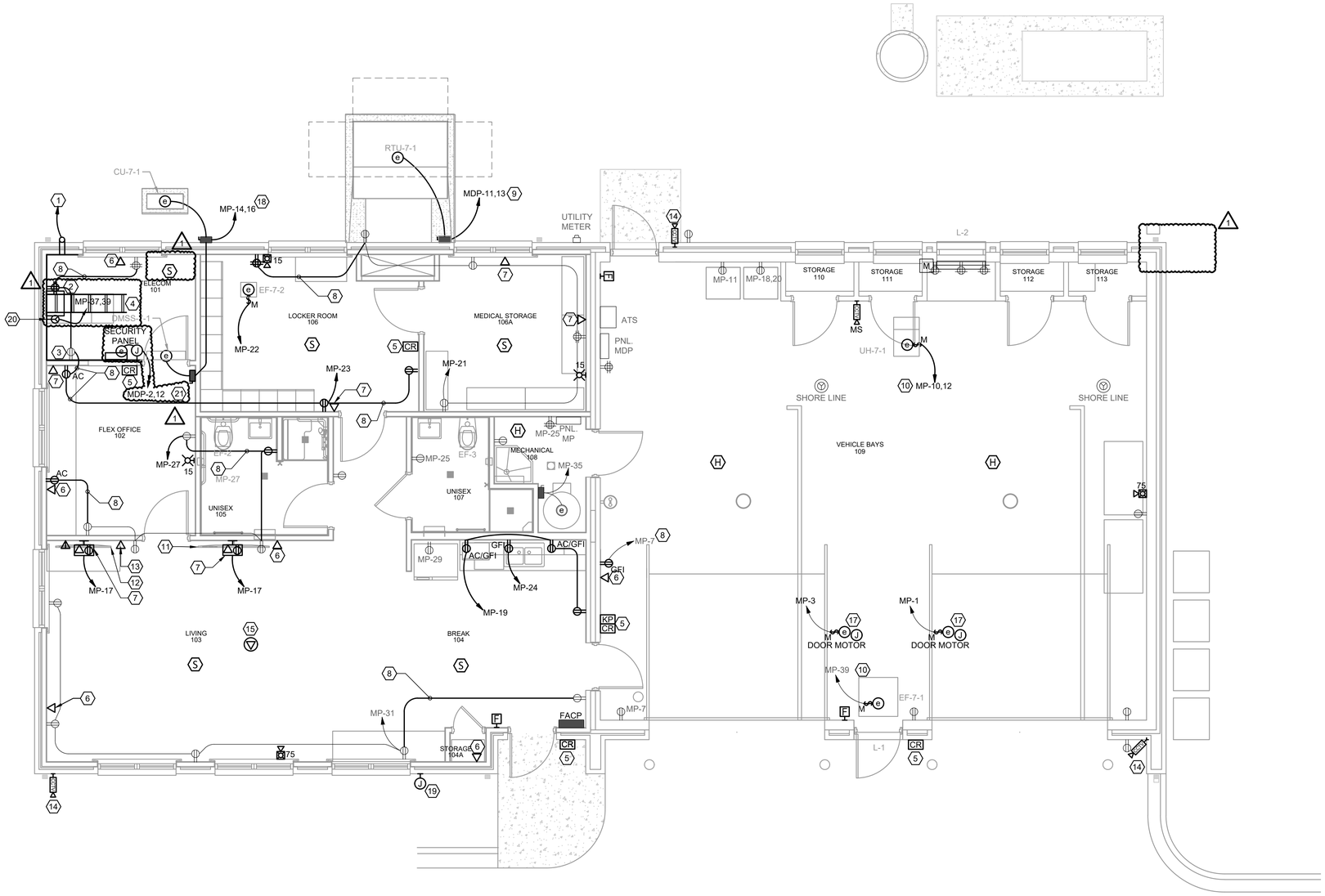

1 ELECTRICAL NEW WORK

SCALE: 1/4" = 1'-0"

0' 2' 4' 8'

GENERAL NOTES

1. REFER TO SHEET E001 AND E002 FOR ADDITIONAL NOTES.
2. DIVISION 26 CONTRACTOR SHALL COORDINATE FINAL POWER AND EQUIPMENT REQUIREMENTS WITH DIVISION 08 CONTRACTOR.

KEY NOTES

1. CONTRACTOR SHALL PROVIDE AND INSTALL CONDUITS FROM UTILITY DEMARCATION POINT BY ROADSIDE TO TELECOM 101. REFER TO TELECOM RISER FOR CONDUIT SIZE AND DETAILS.
2. PROVIDE AND INSTALL TWO POST TELECOM EQUIPMENT RACK. BASIS OF DESIGN: CHATSWORTH 19" TWO POST RACK (55053-103). MOUNT PER MANUFACTURER RECOMMENDED METHODS.
3. CONTRACTOR SHALL PROVIDE AND INSTALL 3/4" FIRE RETARDANT PLYWOOD ON THREE WALLS MOUNTED AT 12" AFF AND SHALL EXTEND TO 108" AFF.
4. PROVIDE AND INSTALL LADDER TRAY. BASIS OF DESIGN: CHATSWORTH 12" LADDER TRAY (11275-13). MOUNT PER MANUFACTURER RECOMMENDED METHODS. SEE SPECIFICATIONS FOR ADDITIONAL INFORMATION.
5. NEW CARD READER AND CARD READER COMBO /WITH KEYPAD CONTRACTOR SHALL PROVIDE AND INSTALL (1) 1" CONDUIT FROM CARD READER LOCATION SHOWN ON DRAWINGS CONTRACTOR SHALL MOUNT (1) 4"X4" SQUARE BACKBOX WITH A SINGLE GANG MUD RING AND A 1" CONDUIT ROUTED TO ABOVE THE ACCESSIBLE CEILING BACK TO TELECOM 101. REFER TO THE SPECIFICATIONS FOR ADDITIONAL INFORMATION.
6. EXISTING WALL MOUNTED OUTLETS CONTRACTOR SHALL PROVIDE AND INSTALL NEW CAT 6 DATA CABLE ROUTED TO TELECOM 101 AND REUSE THE EXISTING PATCH PANELS, CONNECTORS AND FACEPLATES REFER TO THE SPECIFICATIONS FOR ADDITIONAL INFORMATION.
7. NEW WALL MOUNTED DATA OUTLETS CONTRACTOR SHALL PROVIDE AND INSTALL (1) 1" CONDUIT AND BACK-BOX IN THE WALL AND NEW CAT 6 DATA CABLE, FACEPLATE AND CONNECTOR ROUTED TO TELECOM 101 AND REUSE THE EXISTING PATCH PANELS. REFER TO THE DETAIL SHEET E501 AND SPECIFICATIONS FOR ADDITIONAL INFORMATION
8. CONTRACTOR SHALL MODIFY AND EXTEND BRANCH CIRCUIT WIRING AND CONDUIT BETWEEN EXISTING TO REMAIN AND NEW RECEPTACLES.
9. PROVIDE NEW EQUIPMENT CONNECTION (WIRING AND CONDUIT) FOR NEW MECHANICAL EQUIPMENT, REFER TO PANEL SCHEDULE(S) FOR CIRCUIT SIZING.
10. CONTRACTOR TO PROVIDE 2#12, 1#12G IN 3/4" C FOR NEW MECHANICAL EQUIPMENT.
11. CONTRACTOR SHALL PROVIDE AND INSTALL A NEW 65" TV AND ALL MOUNTING HARDWARE PER THE MANUFACTURER'S RECOMMEND INSTALLATION SEE DETAIL SHEET E502 SPECIFICATIONS FOR ADDITIONAL INFORMATION.
12. CONTRACTOR SHALL PROVIDE AND INSTALL A NEW 50" TV AND ALL MOUNTING HARDWARE PER THE MANUFACTURER'S RECOMMEND INSTILLATION SEE DETAIL SHEET E502 SPECIFICATIONS FOR ADDITIONAL INFORMATION.
13. TIME CLOCK OUTLET: CONTRACTOR SHALL PROVIDE AND INSTALL 1" CONDUIT AND BACK-BOX IN THE WALL AND NEW CAT 6 DATA CABLE, FACEPLATE AND CONNECTOR ROUTED TO TELECOM 101 AND REUSE THE EXISTING PATCH PANELS. REFER TO THE DETAIL SHEET E501 AND SPECIFICATIONS FOR ADDITIONAL INFORMATION.
14. CAMERA LOCATION: CONTRACTOR SHALL PROVIDE AND INSTALL 3/4" CONDUIT AND BACK-BOX IN THE CEILING ROUTED BACK TO TELECOM 101.
15. WIRELESS ACCESS POINT: CONTRACTOR SHALL PROVIDE AND INSTALL 1" CONDUIT AND BACK-BOX WITH A FACEPLATE AND CONNECTOR IN THE CEILING ROUTED BACK TO TELECOM 101 AND MOUNT THE OWNER PROVIDE WIRELESS ACCESS POINT.
16. NEW NEMA 14-20R POWER RECEPTACLE FOR TELECOM EQUIPMENT CABINET. SEE PANEL SCHEDULE ON SHEET E-601 FOR MORE INFORMATION.
17. CONTRACTOR SHALL PROVIDE JUNCTION BOX AT 42" AFF. PROVIDE 5#12 IN 3/4"C CONDUIT UP TO DOOR CONTROLLER FOR GARAGE UP/DOWN/STOP WIRING AND POWER. CONTROL BUTTONS SHALL BE PROVIDED BY DIVISION 8 CONTRACTOR.
18. CONTRACTOR TO PROVIDE 2#6, #10G IN 1"C FOR NEW MECHANICAL EQUIPMENT. COORDINATE FINAL DISCONNECT MOUNTING LOCATION WITH DIVISION 23 CONTRACTOR.
19. PROVIDE A NEW EXTERIOR MOUNTED, WEATHERPROOF JUNCTION BOX AT HEIGHT OF APPROXIMATELY 72" AFG. ROUTE NEW 3/4" CONDUIT PENETRATION THRU EXTERIOR WALL. PROVIDE GROMMETS ON INSIDE CONDUIT END FOR CABLE PROTECTION. COORDINATE WITH OWNER FOR FINAL LOCATION AND MOUNTING BEFORE ROUGH-IN.
20. NEW NEMA L6-20R POWER RECEPTACLE FOR TELECOM CABINET EQUIPMENT. MOUNT AT 36" A.F.F.
21. SECURITY PANEL FURNISHED BY OTHERS. BASIS OF DESIGN: PROTUS3 SECURITY PANEL. ELECTRICAL CONTRACTOR SHALL PROVIDE (2) NEW QUAD RECEPTACLES AND NEW WIREWAY TROUGH INSIDE SECURITY PANEL. COORDINATE INSTALLATION WITH SECURITY CONTRACTOR.

NO.	DESCRIPTION	DATE
1	Addendum No. 2	09/10/26

NORTH CAROLINA PROFESSIONAL ENGINEER SEAL 054503 TYLER WINDSOR
9/9/2026

Dewberry
Dewberry Engineers Inc.
2610 Wycliff Road
Suite 410
Raleigh, NC 27607-3073
919.881.3000
NC License No. F-0929

DRAWN BY: KMS,JA,AF
CHECKED BY: TLW
APPROVED BY: TLW

WILLIARD STEWART ARCHITECTS
122 COX AVENUE
RALEIGH, NC 27605
TEL: [919] 834.0620
FAX: [919] 834.2149
williardstewartarchitects.com

WAKE COUNTY
EAST RALEIGH / KIDD ROAD | STATION 7
2910 KIDD ROAD
RALEIGH, NORTH CAROLINA 27610
OWNER: WAKE COUNTY FACILITIES DESIGN & CONSTRUCTION
PROJECT NUMBER: 50192457-01

CONSTRUCTION DOCUMENTS

DRAWING TITLE: ELECTRICAL NEW WORK

SHEET: 01-E111

DATE 7/31/2026

Docusign Envelope ID: CB6C5267-59C8-8210-83F8-67F5ADC9CE86

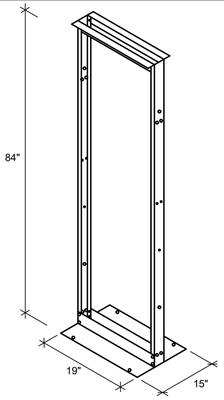

TELECOM EQUIPMENT RACK NOTES:

1. ALL MATERIALS SHALL BE CONTRACTOR FURNISHED AND INSTALLED UNLESS OTHERWISE SPECIFICALLY NOTED.
2. UNIT SHALL BE HIGH STRENGTH 6061-T6 ALUMINUM CONSTRUCTION. UNIT TO BE SELF-SUPPORTING AND RATED FOR 1000 LB LOAD CAPACITY.
3. UNIT TO HAVE EIA #12-24 ALTERNATING HOLE PATTERNS ON BOTH SIDES OF VERTICAL POSTS.
4. PROVIDE WEB CHANNEL HOLES AS SHOWN TO FACILITATE SIDE-BY-SIDE MOUNTING ATTACHMENT.
5. PROVIDE BLACK POWDER COAT FINISH OVER SURFACE TO INHIBIT OXIDATION.
6. UNIT TO BE MOUNTED IN POSITION AS SHOWN ON PLANS. SPACE RACK 6" FROM WALL TO ACCOMMODATE VERTICAL WIRE MANAGEMENT.
7. BOLT BASE SECURELY TO FLOOR. PROVIDE MOUNTING BRACKET TO SECURE TOP OF RACK TO WALL.
8. HORIZONTAL WIRE MANAGEMENT PANELS SHALL BE INSTALLED BETWEEN EVERY FIBER TRAY AND PATCH PANEL ON FRONT AND BACK OF RACK.
9. VERTICAL WIRE MANAGEMENT PANELS SHALL BE INSTALLED THE FULL LENGTH ON BOTH SIDES OF RACK.
10. OWNER ITS TO SUPPLY AND INSTALL ALL ELECTRONIC EQUIPMENT.
11. COORDINATE WITH WTCC ITS FOR FINAL LAYOUT OF RACK EQUIPMENT PRIOR TO BEGINNING WORK.
12. ALL GROUNDING CABLING IN CONDUIT. NO EXPOSED CABLING ALLOWED.

1 TELECOM EQUIPMENT RACK DETAIL — SCALE: NTS

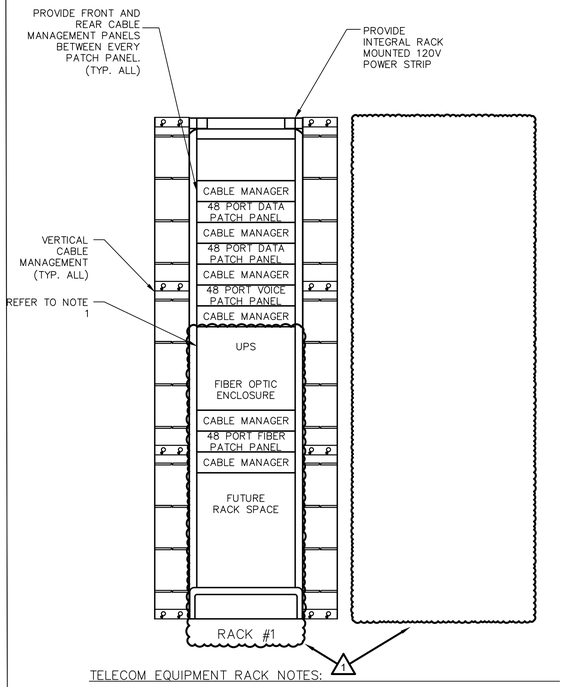

TELECOM EQUIPMENT RACK NOTES:

1. PROVIDE UPS WITH BACNET CARD. BASIS OF DESIGN SHALL BE VERTIV LIEBERT (#GXT5-20000LVRT2UXL) 2000VA RACK-MOUNTED UPS WITH VERTIV SNMP WEBCARD (#RDU101) FOR COMMS WITH EVRN SUPPORT AND RACK MOUNT KIT (#2UTELECOMRKI).

2 TELECOM EQUIPMENT RACK ELEVATION — SCALE: NTS

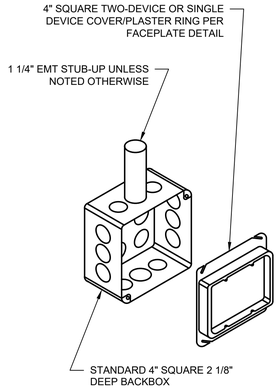

3 TELECOM OUTLET BOX DETAIL — SCALE: NTS

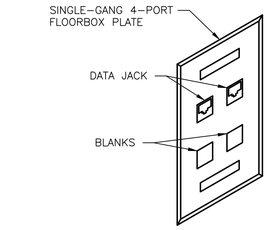

STANDARD OUTLET

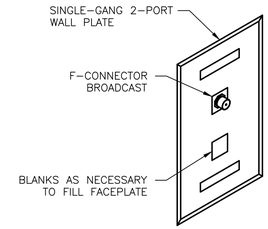

CATV OUTLET

4 TELECOM FACEPLATE DETAIL — SCALE: NTS

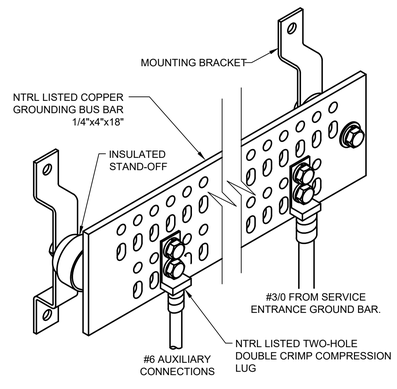

ISOMETRIC VIEW

TELECOM GROUNDING BUSBAR NOTES:

1. ALL GROUNDING CABLING IN CONDUIT. NO EXPOSED CABLING ALLOWED.
2. LABEL EACH BAR CONNECTION.

5 TELECOM GROUNDING BUSBAR — SCALE: NTS

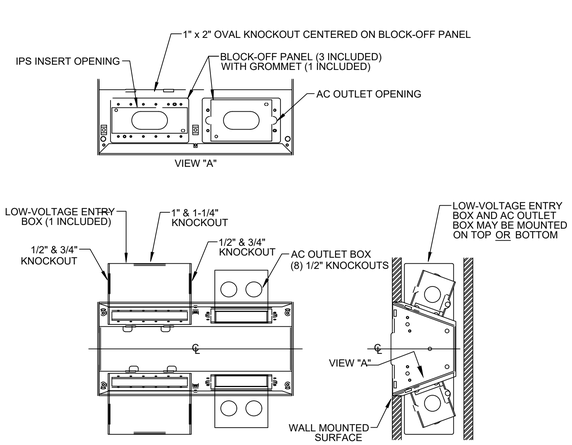

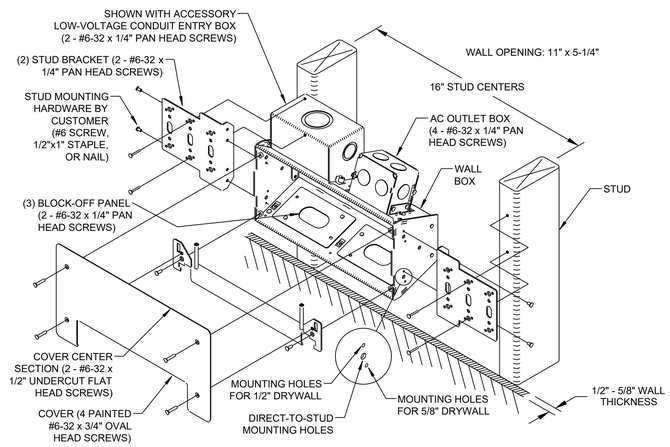

FLAT DISPLAY WALL BOX NOTES:

1. COORDINATE FINAL MOUNTING HEIGHT AND LOCATIONS WITH ARCHITECTURAL ELEVATIONS.
2. DEVICE SHALL BE MOUNTED CENTERED BEHIND FLAT PANEL MONITOR.
3. BASIS OF DESIGN: FSR 'PWR-100'

6 FLAT PANEL DISPLAY WALL BOX — SCALE: NTS

NO.	DESCRIPTION	DATE
1	Addendum No. 2	09/10/26

Signature Valid
NORTH CAROLINA PROFESSIONAL ENGINEER SEAL 054503 TYLER WINOKUR
9/9/2026

Dewberry
Dewberry Engineers Inc.
2610 Wycliff Road
Suite 410
Raleigh, NC 27607-3073
919.881.9000
NC License No. F-0929

DRAWN BY: KMS,JA,AF
CHECKED BY: TLW
APPROVED BY: TLW

WILLIARD STEWART ARCHITECTS
122 COX AVENUE
RALEIGH, NC 27605
TEL: [919] 834.0620
FAX: [919] 834.2149
williardstewartarchitects.com

WAKE COUNTY
EAST RALEIGH / KIDD ROAD | STATION 7
2910 KIDD ROAD
RALEIGH, NORTH CAROLINA 27610
OWNER: WAKE COUNTY FACILITIES
DESIGN & CONSTRUCTION
PROJECT NUMBER: 50192457-01

CONSTRUCTION DOCUMENTS

DRAWING TITLE:
DETAILS

SHEET:
01-E502

DATE
7/31/2026

Docusign Envelope ID: CB6C5267-59C8-8210-83F8-67F5ADC9CE86

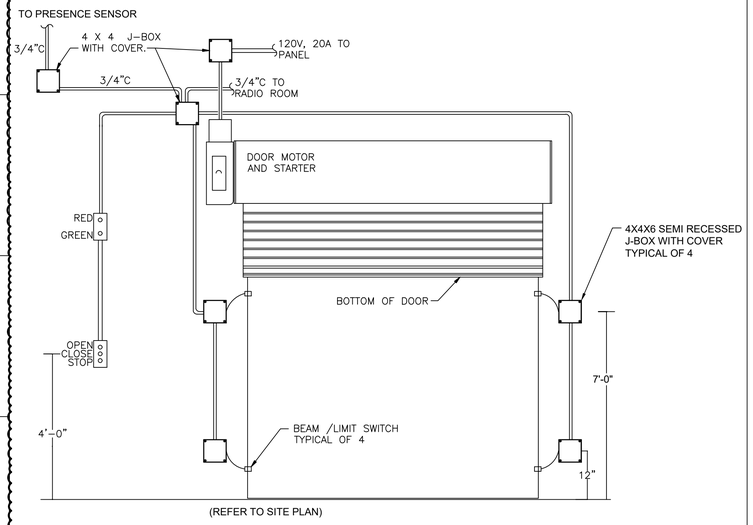

1 OVERHEAD DOOR DETAIL

SCALE: NTS

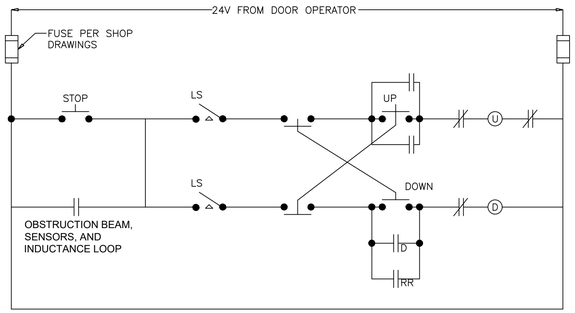

NOTES:

1. OVERHEAD DOORS ARE TO OPERATE FROM LOCAL WALL MOUNTED SWITCHES AND ALSO FROM MOBILE UNITS IN THE TRUCKS.
2. SEE POWER PLANS FOR EXACT QUANTITY OF MOTORS.
3. ONE SYSTEM EACH DOOR.

2 OVERHEAD DOOR CONTROL SCHEMATIC

SCALE: NTS

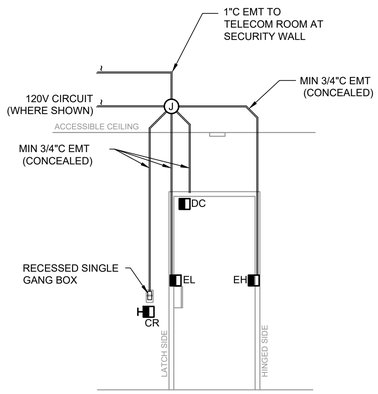

3 TYPICAL CARD ACCESS DOOR ROUGH-IN DETAIL

SCALE: NTS

NO.	DESCRIPTION	DATE
1	Addendum No. 2	09/10/26

NORTH CAROLINA PROFESSIONAL SEAL 054503 ENGINEER TYLER WINOKUR
Signed by: Tyler Winokur
9/9/2026

Dewberry
Dewberry Engineers Inc.
2610 Wycliff Road
Suite 410
Raleigh, NC 27607-3073
919.881.3000
NC License No. F-0929

DRAWN BY: KMS,JA,AF
CHECKED BY: TLW
APPROVED BY: TLW

WILLIARD STEWART ARCHITECTS
122 COX AVENUE
RALEIGH, NC 27605
TEL: [919] 834.0620
FAX: [919] 834.2149
williardstewartarchitects.com

WAKE COUNTY
EAST RALEIGH / KIDD ROAD I
STATION 7
2910 KIDD ROAD
RALEIGH, NORTH CAROLINA 27610
OWNER: WAKE COUNTY FACILITIES DESIGN & CONSTRUCTION
PROJECT NUMBER: 50192457-01

CONSTRUCTION DOCUMENTS

DRAWING TITLE:
DETAILS

SHEET:
01-E503

DATE
7/31/2026

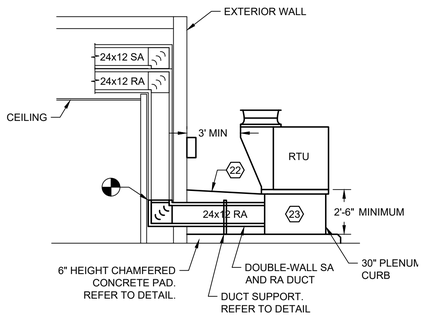

2 RTU SECTION

SCALE: 1/4" = 1'-0"

0' 2' 4' 8'

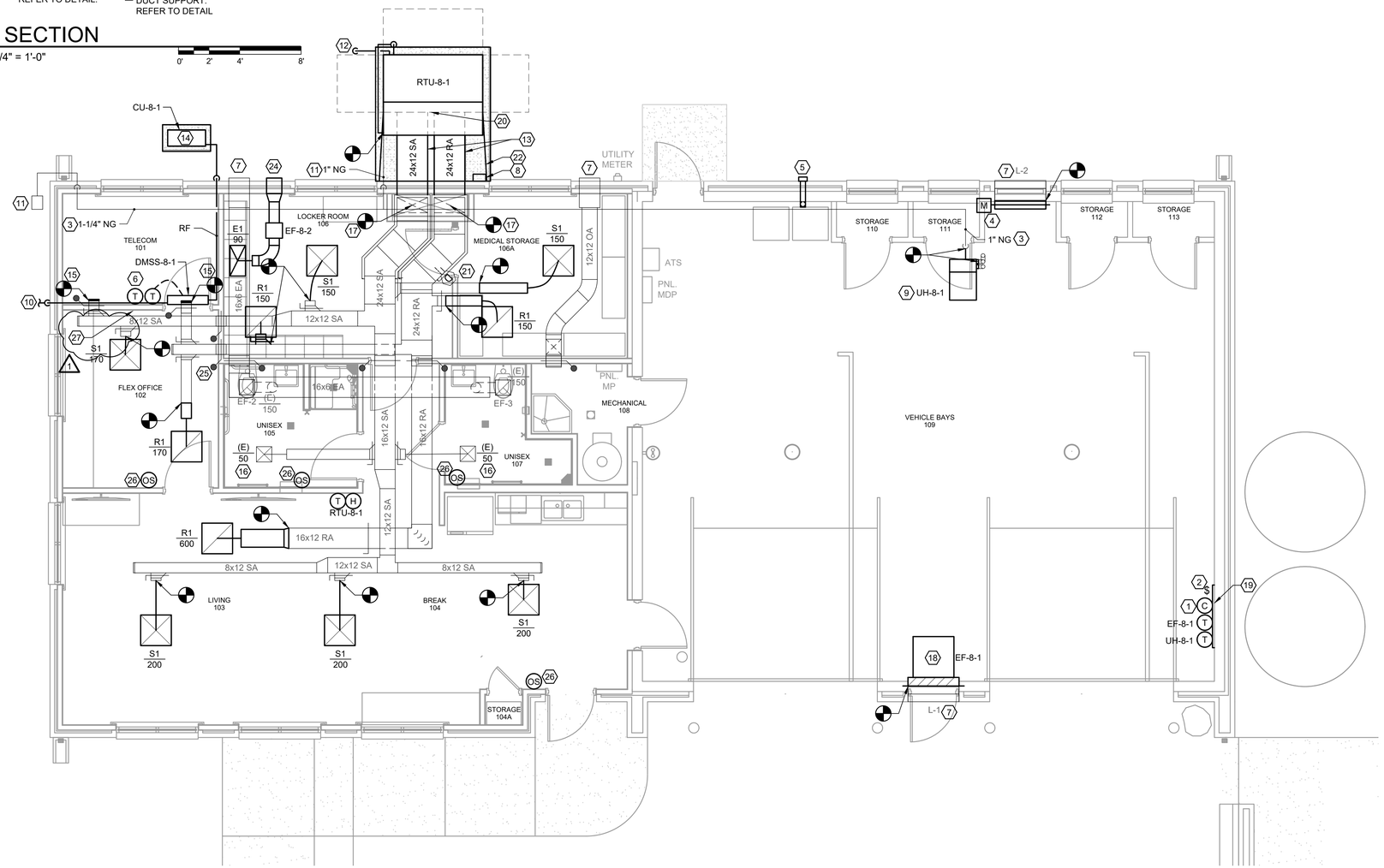

1 MECHANICAL NEW WORK

SCALE: 1/4" = 1'-0"

0' 2' 4' 8'

GENERAL NOTES

1. PROVIDE ALL SENSORS, DETECTORS, THERMOSTATS LOCATED IN THE VEHICLE BAY WITH WIRE GUARDS.
2. COMPLETE CLEANING OF AIR DISTRIBUTION SYSTEM PRIOR TO INSTALLATION OF NEW DUCTWORK AND DIFFUSERS. CLEAN IN ACCORDANCE WITH SPECIFICATION 233100.
3. FOUR WALL-MOUNTED OCCUPANCY SENSORS SHOWN FOR RTU OPERATION. SEE CONTROL SEQUENCE.
4. PROJECT IS SEISMIC DESIGN CATEGORY C AND WILL REQUIRE DELEGATED DESIGN FOR SEISMIC, WIND AND VIBRATION CONTROLS. REFER TO SPECIFICATION 230548 - HVAC SEISMIC, WIND AND VIBRATION CONTROLS.

KEY NOTES (#)

1. PROVIDE MACURCO CX-12 DUAL DETECTION CO/NO2 GAS DETECTOR (OR EQUAL) WITH REPLACEABLE SENSOR MODULES AND INTERLOCK WITH EF-8-1. REFER TO CONTROLS WIRING DIAGRAM.
2. PROVIDE TIMED OVERRIDE SWITCH AND INTERLOCK WITH EF-8-1.
3. EXISTING NG PIPING RUN WITHIN ATTIC SPACE.
4. PROVIDE MOTORIZED DAMPER AND INTERLOCK WITH EF-8-1 FAN STARTER. FIELD VERIFY LOUVER AND DUCT SIZE.
5. 4"Ø HOODED ALUMINUM WALL CAP WITH BACKDRAFT DAMPER. COORDINATE WITH DRYER LOCATION. BOTTOM OF DISCHARGE SHALL BE 24 INCHES OR MORE ABOVE FINISHED GRADE. PROVIDE 4" DIAMETER DRYER DUCT. DUCT SHALL BE SMOOTH SURFACE ALUMINUM.
6. PROVIDE SCHNEIDER SE8650 THERMOSTAT ADJACENT TO DMSS-8-1 THERMOSTAT FOR CONNECTION TO OWNER'S BAS SYSTEM. SE8650 THERMOSTAT WILL BE USED FOR TEMPERATURE MONITORING ONLY, NOT CONTROL OF THE DMSS.
7. EXISTING WALL CAP TO REMAIN.
8. RTU FUSED DISCONNECT.
9. PROVIDE NEW UNIT HEATER IN SAME LOCATION AS EXISTING. REUSE NATURAL GAS PIPING, COMBUSTION AND FLUE PIPE AS POSSIBLE FOR RECONNECTION TO NEW UNIT. PROVIDE THERMOSTAT AS SPECIFIED.
10. ROUTE ¾" CONDENSATE TO GROUND. PROVIDE WALL SUPPORT. TERMINATE CONDENSATE 12" ABOVE GROUND. PROVIDE CONCRETE SPLASHBLOCK.
11. EXISTING 1" BURIED NATURAL GAS PIPE. EXISTING GAS METER DELIVERS 7" WC PRESSURE. COORDINATE WITH UTILITY TO INCREASE DELIVERY PRESSURE TO 10" WC. CONFIRM EXISTING PIPE SIZE AND MATERIAL PRIOR TO RECONNECTION AND COORDINATE WITH ENGINEER/OWNER IF DIFFERENT.
12. DISCHARGE RTU CONDENSATE INTO EXISTING DRYWELL. CONFIRM DRYWELL LOCATION IN FIELD. NOTIFY OWNER/ENGINEER IF IT CANNOT BE LOCATED.
13. DOUBLE WALL DUCT.
14. CONDENSING UNIT WITH CONCRETE PAD. REFER TO CONDENSING UNIT DETAIL.
15. CAP, INSULATE AND SEAL DUCT.
16. REBALANCE EXISTING DIFFUSERS AS INDICATED.
17. SEE RTU SECTION DETAIL.
18. VEHICLE BAY EXHAUST FAN. REFER TO EXHAUST FAN DETAIL.
19. PROVIDE INSULATED BACK PANEL FOR VEHICLE BAY SENSORS.
20. MAINTAIN MINIMUM 6" SEPARATION BETWEEN DUCT PENETRATIONS INTO PLENUM CURB.
21. DUCT DETECTOR EXISTING TO REMAIN.
22. FIELD FABRICATED ALUMINUM DUCT ENCLOSURE WITH 18"X18" SIDE ACCESS DOOR. CROWN DUCT ENCLOSURE AT THE TOP SO THAT WATER SHEDS TO BOTH SIDES. SECURE TO EXISTING BRICK WALL WITH COUNTER FLASHING FRAME FASTENED TO THE BRICKWORK. INSTALL WEATHERPROOF SEALANT AND PATCH EXISTING WALL AS NEEDED. COORDINATE WITH ARCHITECT FOR MORE DETAIL ON WALL CONNECTION.
23. 30" PLENUM CURB. RETURN DUCT TO PENETRATE PLENUM CURB AND USE PLENUM CURB AS RETURN AIR PLENUM. SUPPLY AIR TO BE DIRECTLY DUCTED INTO RTU SUPPLY CONNECTION. PLENUM SHALL BE CONSTRUCTED WITH DIVIDER MID-WAY, BETWEEN SUPPLY AND RETURN PATH. DUCT CONNECTIONS TO CURB SHALL BE WATER TIGHT. SUPPLY DUCT INSULATION TO CONTINUE UNTIL RTU SUPPLY CONNECTION.
24. 12"x12" EXHAUST LOUVER. SEE ARCHITECTURAL PLANS FOR DETAIL.
25. EXISTING FIRE DAMPER. SEE ARCHITECTURAL PLANS FOR WALL RATINGS (TYP.).
26. PROVIDE WALL MOUNTED OCCUPANCY SENSOR.
27. REFRIGERANT CHARGE NATURAL VENTILATION OPENING: 12" X 12" WALL MOUNTED LOUVER AT A MAXIMUM OF 12" AFF TO THE BOTTOM OF THE LOUVER.

NO.	DESCRIPTION	DATE
1	Addendum No. 2	9/10/26

NORTH CAROLINA PROFESSIONAL SEAL 061183 ENGINEER AYA C. CAMPBELL 9/9/26

Dewberry
Dewberry Engineers Inc.
2610 Wycliff Road
Suite 410
Raleigh, NC 27607-3073
919.881.3080
NC License No. F-0929

DRAWN BY: VALUE
CHECKED BY: VALUE
APPROVED BY: VALUE

WILLIARD STEWART ARCHITECTS
122 COX AVENUE
RALEIGH, NC 27605
TEL: [919] 834.0620
FAX: [919] 834.2149
williardstewartarchitects.com

WAKE COUNTY
EMS STATION RENOVATIONS
NC STATE EMS | STATION 8
1361 VARSITY DRIVE
RALEIGH, NORTH CAROLINA 27606
OWNER: WAKE COUNTY FACILITIES
DESIGN & CONSTRUCTION

PROJECT NUMBER: 50192457

CONSTRUCTION DOCUMENTS

DRAWING TITLE:
MECHANICAL NEW WORK

SHEET:
02-M111

DATE
7/31/2026

RTU SCHEDULE

MARK	SERVICE	TYPE	MANUFACTURER / MODEL	SUPPLY AIR FAN TYPE	SUPPLY AIR FAN COOLING AIR FLOW (CFM)	SUPPLY AIR FAN HEATING AIR FLOW (CFM)	SUPPLY AIR FAN ESP (IN WG)	OUTSIDE AIR INTAKE AIR FLOW (CFM)	COOLING SECTION EAT (Fdb/Fwb)	COOLING SECTION LAT (Fdb/Fwb)	COOLING SECTION TOTAL CAPACITY (MBH)	COOLING SECTION SENSIBLE CAPACITY (MBH)	COOLING SECTION IEER / ISMRE2	COOLING SECTION AMB. (F)	HOT GAS REHEAT EAT (F)	HOT GAS REHEAT LAT (F)	HOT GAS REHEAT CAPACITY (MBH)	HEATING SECTION EAT (F)	HEATING SECTION LAT (F)	HEATING SECTION CAPACITY (MBH)	GAS INPUT (MBH)	GAS OUTPUT (MBH)	GAS MAX OUTPUT (MBH)	GAS EFF. (%)	GAS REQD INPUT PRESS (IN. W.C.)	HEAT PUMP CAPACITY (MBH)	HEAT PUMP COP	HEAT PUMP AMB. (F)	FILTRATION TYPE & THICKNESS	FILTRATION EFF. (MERV)	ELECTRICAL MCA (A)	ELECTRICAL MOCP (A)	ELECTRICAL VOLTAGE/ PHASE	DIMENSIONS AND WEIGHT FOOTPRINT (IN x IN)	DIMENSIONS AND WEIGHT HEIGHT (IN)	DIMENSIONS AND WEIGHT WEIGHT (LBS)	NOTES
RTU-8-1	NC STATE - STATION 8	PACKAGED UNIT	CAPTIVEAIRE / PARAGON	PLENUM	1,170	1,170	1.25	440	82.5 / 67.7	53.5 / 53.0	60.0	40.0	17.9 / 6.4	95.0	53.0	75.1	28.4	53.0	85.0	45.0	16.9	13.7	52.0	81%	7 - 14	31.3	3.5	18.0	2" PLEATED PANEL	13	54	60	240/1	74 x 64	58	1,356	1,2,3,4,5,6,7,8,9,10,11,12,13

NOTES:
1. REFER TO SECTION 236213 FOR ADDITIONAL REQUIREMENTS. REFER TO UNIT DETAILS AND DIAGRAMS FOR COMPLETE CONFIGURATION AND DIMENSIONAL DETAILS.
2. MAX. COOLING COIL FACE VELOCITY = 500 FPM.
3. PROVIDE SINGLE-POINT ELECTRICAL CONNECTION AND FUSED-DISCONNECT SWITCH.
4. COILS APD'S ARE BASED ON THE MAX. SUPPLY FAN AIRFLOW.
5. PROVIDE NEW CONCRETE PAD THAT IS 6-INCHES LONGER AND WIDER THAN UNIT FOOTPRINT AND 6-INCHES DEEP WITH 4-INCHES DEEP CRUSHED STONE BASE. REFER TO DETAIL.
6. PROVIDE WITH MODULATING HOT GAS REHEAT COIL, HAIL GUARDS, 2" CLOSE CELL FOAM PANEL INSULATION AND DOUBLE WALLED CASING.
7. BOTTOM DISCHARGE CONFIGURATION. PROVIDE MIMIMUM 30 INCH HEIGHT DUCT CURB. PROVIDE 2-INCH R-10 CURB INSULATION. PROVIDE WITH SOLID METAL INTERIOR LINER. PROVIDE SEPARATION PANEL BETWEEN SUPPLY AND RETURN AIR PATH.
8. PROVIDE WITH GAS AUXILIARY / EMERGENCY HEAT STAINLESS STEEL HIGH EFFICEINCY FURNACE HEAT EXCHANGER WITH MODULATING OR STEP CONTROLLER.
9. PROVIDE MODULATING COMPRESSOR.
10. PROVIDE PACKAGE UNIT CONTROLLER WITH AUXILIARY RELAY TO START RESTROOM EXHAUST FANS BASED ON OCCUPANCY.
11. PROVIDE WITH BACNET IP CARD.
12. PROVIDE WITH HAIL GUARD.
13. PROJECT IS SEISMIC DESIGN CATEGORY C AND WILL REQUIRE DELEGATED DESIGN FOR SEISMIC, WIND AND VIBRATION CONTROLS. PROVIDE UNIT SPECIFIC SEISMIC, WIND AND VIBRATION CONTROLS AS NEEDED.

DUCTLESS MINI-SPLIT UNIT SCHEDULE

MARK (INDOOR UNIT)	MARK (OUTDOOR UNIT)	SERVICE	TYPE	MANUFACTURER / MODEL INDOOR & OUTDOOR	REFRIG. TYPE	MAXIMUM REFRIG. CHARGE (LBS)	COOLING TOT. CAP. (MBH)	COOLING SENS. CAP. (MBH)	COOLING SEER/EER (BTUH/W)	COOLING AMB. (F)	HEAT PUMP CAPACITY (MBH)	HEAT PUMP HSPF2 / COP	HEAT PUMP AMB. (F)	ELECTRICAL - OUTDOOR UNIT MCA (A)	ELECTRICAL - OUTDOOR UNIT MOCP (A)	ELECTRICAL - OUTDOOR UNIT VOLTAGE/ PHASE	MAX. EQUIV. PIPE LENGTHS HEIGHT (FT)	MAX. EQUIV. PIPE LENGTHS LENGTH (FT)	DIMENSIONS AND WEIGHT - OUTDOOR FOOTPRINT (IN x IN)	DIMENSIONS AND WEIGHT - OUTDOOR HEIGHT (IN)	DIMENSIONS AND WEIGHT - OUTDOOR WEIGHT (LBS)	NOTES
DMSS-8-1	CU-8-1	TELECOM 101	WALL MOUNTED / HEAT PUMP	MITSUBISHI / PKA & PUZ 1.5 TON	R-454B	4.5	18.0	10.8	19.5/11	95	11.7	8.9 / 2.4	17	16	27	240/1	100	100	34 x 11	24	100	1,2,3,4,5,6,7,8,9

NOTES:
1. REFER TO SECTION 238116 FOR ADDITIONAL REQUIREMENTS.
2. SOUND PERFORMANCE IS BASED ON SOUND PRESSURE LEVELS MEASURED AT 3 FEET FROM UNIT AT FULL CAPACITY IN ACCORDANCE WITH AHRI 270 AND 350.
3. ALL UNITS SHALL MEET OR EXCEED SEASONAL ENERGY EFFICIENCY RATIO (SEER).
4. SIZE REFRIGERANT PIPING PER MANUFACTURER'S RECOMMENDATIONS.
5. PROVIDE SINGLE-POINT POWER CONNECTION. PROVIDE FUSED-DISCONNECT SWITCH FOR OUTDOOR UNIT. PROVIDE MOTOR-RATED DISCONNECT SWITCH FOR INDOOR UNIT.
6. PROVIDE WITH WIND BAFFLES AND LOW AMBIENT OPTION TO ENABLE COOLING DOWN TO 20°F OAT.
7. PROVIDE WIRED THERMOSTAT / TEMPERATURE SENSOR AS INDICATED. WIRELESS REMOTE CONTROLS ARE NOT ACCEPTABLE.
8. ~~CONDENSING UNIT COIL SHALL BE COPPER TUBING.~~
9. PROVIDE WITH REFRIGERANT LEAK MITIGATION. (1)

FAN SCHEDULE

MARK	SERVICE	TYPE	MANUFACTURER / MODEL	AIR FLOW (CFM)	ESP (IN WG)	EC MOTOR (Y or N)	DRIVE TYPE	SPEED (RPM)	BRAKE MOTOR (HP)	NOMINAL MOTOR (HP)	MAX. SOUND (SONES)	DAMPER TYPE	FLA (A)	MCA (A)	MOCP (A)	VOLTAGE/ PHASE	STARTER/ DSCNNCT MEANS	NOTES
EF-8-1	STATION 8 VEHICLE BAY	PROPELLER WALL FAN	GREENHECK / BAER	2,800	0.40	NO	BELT	1571	0.81	1.00	31	GRAVITY	16	20	35	120/1	MRS	1,2,3,4,5,6,7
EF-8-2	STATION 8 LOCKER ROOM	IN-LINE CABINET	GREENHECK / SQ-70	90	0.30	NO	DIRECT	1442	0.02	1/15	4	GRAVITY	1.3	1.6	15	120/1	MRS	1,2,4,8

NOTES:
1. REFER TO SECTION 233400 FOR ADDITIONAL REQUIREMENTS.
2. PROVIDE STARTING AND DISCONNECTING MEANS AS SCHEDULED. (MRS = MOTOR RATED SWITCH)
3. PROVIDE CARBON MONOXIDE AND NITROGEN DIOXIDE DETECTORS. ACTIVATE FAN UPON DETECTION OF CARBON MONOXIDE OR NITROGEN DIOXIDE EXCEEDING 25PPM.
4. PROVIDE HANGING BRACKETS WITH VIBRATION ISOLATION.
5. PROVIDE WALL MOUNTED PUSHBUTTON TIMER SWITCH FOR EXHAUST FANS INTERLOCKED WITH GAS DETECTOR.
6. PROVIDE WALL COLLAR WITH MOTOR SIDE OSHA APPROVED GUARD.
7. PROVIDE FACTORY MOUNTED MOTOR ACCESSIBLE BETWEEN OCCUPIED SPACE AND FAN BLADES.
8. PROVIDE SPEED CONTROL.

AIR DISTRIBUTION SCHEDULE

MARK	SERVICE	TYPE	MANUFACTURER / SERIES	MATERIAL	COLOR	PATTERN	MAX. AIR FLOW (CFM)	FACE SIZE (IN x IN)	NECK SIZE (IN x IN)	APD (IN WG)	MAX. SOUND (NC)	NOTES
S1	SUPPLY	SQUARE PERFORATED FACE	TITUS PSS-AA	ALUMINUM	WHITE	4-WAY	100	24 x 24	6	0.10	25	1-4
							200		8	0.10		
R1 / E1	RETURN/EXHAUST	SQUARE PERFORATED FACE	TITUS PAR-AA	ALUMINUM	WHITE	N/A	200	24 x 24	8	0.10	20	1-4
							325	24 x 24	10	0.10		
							450	24 x 24	12	0.10		
							600	24 x 24	14	0.10		
(E)	EXISTING DIFFUSER BALANCE TO AIRFLOW INDICATED.											

NOTES:
1. REFER TO SECTION 233713 FOR ADDITIONAL REQUIREMENTS.
2. SOUND LEVELS SHALL BE BASED ON ASHRAE 70.
3. VERIFY MOUNTING FRAME STYLE WITH ARCHITECTURAL REFLECTED CEILING PLANS, FINISH SCHEDULES AND EXISTING CEILINGS.
4. DUCT BRANCH FROM MAIN TAKEOFF TO AIR INLET / OUTLET SHALL MATCH SCHEDULED NECK SIZE UNLESS OTHERWISE NOTED.

UNIT HEATER SCHEDULE

MARK	SERVICE	TYPE	MANUFACTURER / MODEL	FAN AIR FLOW (CFM)	FAN MOTOR (HP)	FAN VOLTAGE/ PHASE	FUEL-FIRED EAT (F)	FUEL-FIRED LAT (F)	FUEL-FIRED FUEL TYPE	FUEL-FIRED INPUT (MBH)	FUEL-FIRED OUTPUT (MBH)	FUEL-FIRED EFF. (%)	NOTES
UH-8-1	VEHICLE BAY	HORIZONTAL UNIT HEATER	MODINE / HDS	1490	1/6	240/1	55	105	NAT. GAS	100.0	82.0	82%	1,2,3,4,5

NOTES:
1. REFER TO SECTION 238239 FOR ADDITIONAL REQUIREMENTS.
2. PROVIDE MOTOR-RATED DISCONNECT SWITCH.
3. PROVIDE FACTORY-FABRICATED WALL/CEILING SUPPORT.
4. PROVIDE WITH LINE-VOLTAGE THERMOSTAT WITH FAN AUTO OR ON SELECTION SWITCH.
5. PROVIDE FLUE AND COMBUSTION AIR DUCT.

DMSS-8-1 REFRIGERANT CALCULATIONS

MAXIMUM REFRIGERANT CHARGE CALCULATION

UNIT INFO UNIT TAG	RELEASABLE LBS	OCCUPANCY CLASSIFICATION	REFRIGERANT DATA REFREIGERANT TYPE	SAFETY GROUP	RCL (LB/1000 CUFT)	TOTAL VOLUME (CUFT)	MAXIMUM ALLOWABLE QUANTITY RCL (LBS)	ROOM INFO NUMBER	NAME	AREA (SQFT)	HEIGHT (FT)	VOLUME (CUFT)
								1	TELECOM	77	8	616
								2	OFFICE	118	8	944
TELECOM DMSS	4.375	COMMERCIAL	R-454B	A2L	3.1	1560	4.836					

NOTE: SEE "NATURAL VENTILATION OPENING FOR GROUP A2L REFRIGERANTS (ASHRAE 15-2022 7.2.3.2.2)" CALCULATION FOR THE METHOD OF CLASSIFYING THE ADJACENT FLEX OFFICE AS A CONNECTING SPACE VIA NATURAL VENTILATION.

NATURAL VENTILATION OPENING FOR GROUP A2L REFRIGERANTS (ASHRAE 15-2022 7.2.3.2.2)

UNIT INFO UNIT TAG	RELEASABLE QTY (m,rel)	MAXIMUM ALLOWABLE QTY IN TELECOM ROOM ALONE (m,room)	REFRIGERANT DATA REFREIGERANT TYPE	SAFETY GROUP	LFL (LB/1000 CUFT)	MOLAR MASS (M)	TELECOM ROOM INFO NAME	AREA (SQFT)	HEIGHT (FT)	VOLUME (CUFT)	MINIMUM VENTILATION OPENING AREA (A,vent) (sq ft)
TELECOM DMSS	4.375	1.9096	R-454B	A2L	22	62.6	TELECOM	77	8	616	0.410

NOTE: USING THE NATURAL VENTILATION OPENING FOR A2L REFRIGERANT EQUATION IN ASHRAE 15-2022 IN SECTION 7.2.3.2.2, WE CALCULATE THE MINIMUM VENTILATION OPENING SIZE OF A LOUVER CONNECTING THE TELECOM ROOM AND ADJACENT OFFICE TO BE ABLE TO UTILIZE ITS AREA AS A CONNECTED SPACE IN OUR MAXIMUM ALLOWABLE VOLUME CALCULATIONS. (1)

NO.	DESCRIPTION	DATE
1	Addendum No. 2	9/10/26

NORTH CAROLINA PROFESSIONAL ENGINEER SEAL 061185 AVI C. CAMPBELL 9/9/26

Dewberry
Dewberry Engineers Inc.
2610 Wycliff Road
Suite 410
Raleigh, NC 27607-3073
(919) 881-3080
NC License No. F-0929

DRAWN BY: VALUE
CHECKED BY: VALUE
APPROVED BY: VALUE

WILLIARD STEWART ARCHITECTS
122 COX AVENUE
RALEIGH, NC 27605
TEL: [919] 834.0620
FAX: [919] 834.2149
williardstewartarchitects.com

WAKE COUNTY
EMS STATION RENOVATIONS
NC STATE EMS | STATION 8
1361 VARSITY DRIVE
RALEIGH, NORTH CAROLINA 27606
OWNER: WAKE COUNTY FACILITIES
PROJECT NUMBER: 50192457
DESIGN & CONSTRUCTION
CONSTRUCTION DOCUMENTS

DRAWING TITLE:
SCHEDULES

SHEET:
02-M601

DATE
7/31/2026

Docusign Envelope ID: 285601F9-68F4-8A4E-8082-5DF9805C5B93

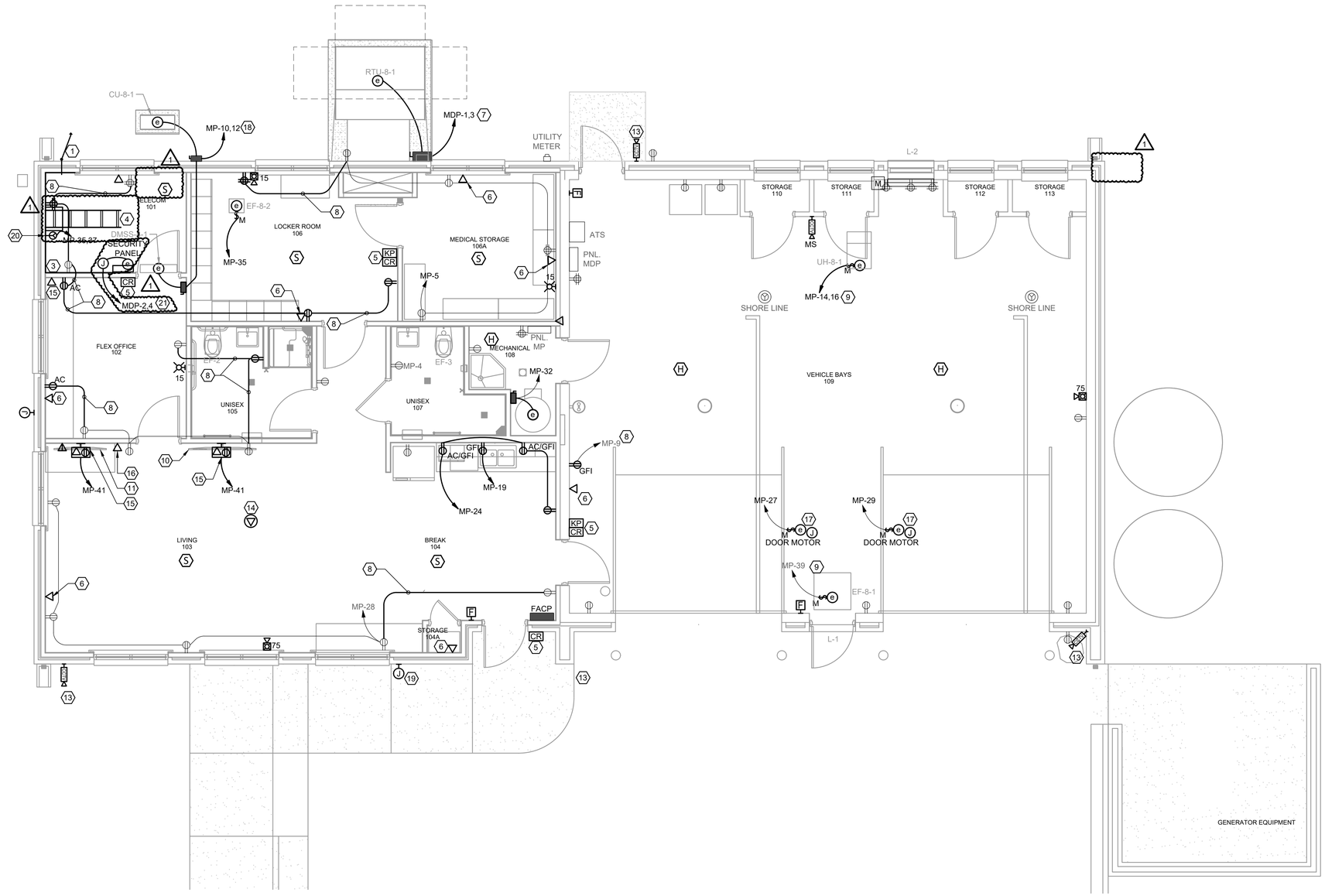

1 ELECTRICAL NEW WORK

SCALE: 1/4" = 1'-0"

0' 2' 4' 8'

GENERAL NOTES

1. REFER TO SHEET E001 AND E002 FOR ADDITIONAL NOTES.
2. DIVISION 26 CONTRACTOR SHALL COORDINATE FINAL POWER AND EQUIPMENT REQUIREMENTS WITH DIVISION 08 CONTRACTOR.

KEY NOTES (#)

1. CONTRACTOR SHALL PROVIDE AND INSTALL CONDUITS FROM UTILITY DEMARCATION POINT BY ROADSIDE TO TELECOM 101. REFER TO TELECOM RISER FOR CONDUIT SIZE AND DETAILS.
2. PROVIDE AND INSTALL TWO POST TELECOM EQUIPMENT RACK. BASIS OF DESIGN: CHATSWORTH 19" TWO POST RACK (55053-103). MOUNT PER MANUFACTURER RECOMMENDED METHODS.
3. CONTRACTOR SHALL PROVIDE AND INSTALL 3/4" FIRE RETARDANT PLYWOOD ON THREE WALLS MOUNTED AT 12" AFF AND SHALL EXTEND TO 108" AFF.
4. PROVIDE AND INSTALL LADDER TRAY. BASIS OF DESIGN: CHATSWORTH 12" LADDER TRAY (11275-13). MOUNT PER MANUFACTURER RECOMMENDED METHODS. SEE SPECIFICATIONS FOR ADDITIONAL INFORMATION.
5. NEW CARD READER AND CARD READER COMBO /WITH KEYPAD CONTRACTOR SHALL PROVIDE AND INSTALL (1) 1" CONDUIT FROM CARD READER LOCATION SHOWN ON DRAWINGS CONTRACTOR SHALL MOUNT (1) 4"X4" SQUARE BACKBOX WITH A SINGLE GANG MUD RING AND A 1" CONDUIT ROUTED TO ABOVE THE ACCESSIBLE CEILING BACK TO TELECOM 101. REFER TO THE SPECIFICATIONS FOR ADDITIONAL INFORMATION.
6. EXISTING WALL MOUNTED OUTLETS CONTRACTOR SHALL PROVIDE AND INSTALL NEW CAT 6 DATA CABLE ROUTED TO TELECOM 101 AND REUSE THE EXISTING PATCH PANELS, CONNECTORS AND FACEPLATES REFER TO THE SPECIFICATIONS FOR ADDITIONAL INFORMATION.
7. PROVIDE NEW EQUIPMENT CONNECTION (WIRING AND CONDUIT) FOR NEW MECHANICAL EQUIPMENT, REFER TO PANEL SCHEDULE(S) FOR CIRCUIT SIZING.
8. CONTRACTOR SHALL MODIFY AND EXTEND BRANCH CIRCUIT WIRING AND CONDUIT BETWEEN EXISTING TO REMAIN AND NEW RECEPTACLES.
9. CONTRACTOR TO PROVIDE 2#12, 1#12G IN 3/4"C FOR NEW MECHANICAL EQUIPMENT.
10. CONTRACTOR SHALL PROVIDE AND INSTALL A NEW 65" TV AND ALL MOUNTING HARDWARE PER THE MANUFACTURER'S RECOMMEND INSTILLATION SEE DETAIL SHEET E502 SPECIFICATIONS FOR ADDITIONAL INFORMATION.
11. CONTRACTOR SHALL PROVIDE AND INSTALL A NEW 50" TV AND ALL MOUNTING HARDWARE PER THE MANUFACTURER'S RECOMMEND INSTALLATION SEE DETAIL SHEET E502 SPECIFICATIONS FOR ADDITIONAL INFORMATION.
12. TIME CLOCK OUTLET: CONTRACTOR SHALL PROVIDE AND INSTALL 1" CONDUIT AND BACK-BOX IN THE WALL AND NEW CAT 6 DATA CABLE, FACEPLATE AND CONNECTOR ROUTED TO TELECOM 101 AND REUSE THE EXISTING PATCH PANELS. REFER TO THE DETAIL SHEET E501 AND SPECIFICATIONS FOR ADDITIONAL INFORMATION.
13. CAMERA LOCATION: CONTRACTOR SHALL PROVIDE AND INSTALL 3/4" CONDUIT AND BACK-BOX IN THE CEILING ROUTED BACK TO TELECOM 101.
14. WIRELESS ACCESS POINT: CONTRACTOR SHALL PROVIDE AND INSTALL 1" CONDUIT AND BACK-BOX WITH A FACEPLATE AND CONNECTOR IN THE CEILING ROUTED BACK TO TELECOM 101 AND MOUNT THE OWNER PROVIDE WIRELESS ACCESS POINT.
15. NEW WALL MOUNTED DATA OUTLETS CONTRACTOR SHALL PROVIDE AND INSTALL (1) 1" CONDUIT AND BACK-BOX IN THE WALL AND NEW CAT 6 DATA CABLE, FACEPLATE AND CONNECTOR ROUTED TO THE NEW TELECOM 101 AND REUSE THE EXISTING PATCH PANELS. REFER TO THE DETAIL SHEET E501 AND SPECIFICATIONS FOR ADDITIONAL INFORMATION.
16. TIME CLOCK OUTLET: CONTRACTOR SHALL PROVIDE AND INSTALL 3/4" CONDUIT AND BACK-BOX IN THE WALL AND NEW CAT 6 DATA CABLE, FACEPLATE AND CONNECTOR ROUTED TO TELECOM 101 AND REUSE THE EXISTING PATCH PANELS. REFER TO THE DETAIL SHEET E501 AND SPECIFICATIONS FOR ADDITIONAL INFORMATION.
17. CONTRACTOR SHALL PROVIDE JUNCTION BOX AT 42" AFF. PROVIDE 5#12 IN 3/4"C CONDUIT UP TO DOOR CONTROLLER FOR GARAGE UP/DOWN/STOP WIRING AND POWER. CONTROL BUTTONS SHALL BE PROVIDED BY DIVISION 8 CONTRACTOR.
18. CONTRACTOR TO PROVIDE 2#6, #10G IN 1"C FOR NEW MECHANICAL EQUIPMENT. COORDINATE FINAL DISCONNECT MOUNTING LOCATION WITH DIVISION 23 CONTRACTOR.
19. PROVIDE A NEW EXTERIOR MOUNTED, WEATHERPROOF JUNCTION BOX AT HEIGHT OF APPROXIMATELY 72" AFG. ROUTE NEW 3/4" CONDUIT PENETRATION THRU EXTERIOR WALL. PROVIDE GROMMETS ON INSIDE CONDUIT END FOR CABLE PROTECTION. COORDINATE WITH OWNER FOR FINAL LOCATION AND MOUNTING BEFORE ROUGH-IN.
20. NEW NEMA L6-20R POWER RECEPTACLE FOR TELECOM CABINET EQUIPMENT. MOUNT AT 96" A.F.F.
21. SECURITY PANEL FURNISHED BY OTHERS. BASIS OF DESIGN: PROTUS3 SECURITY PANEL. ELECTRICAL CONTRACTOR SHALL PROVIDE (2) NEW QUAD RECEPTACLES AND NEW WIREWAY TROUGH INSIDE SECURITY PANEL. COORDINATE INSTALLATION WITH SECURITY CONTRACTOR.

NO.	DESCRIPTION	DATE
1	Addendum No. 2	09/10/26

NORTH CAROLINA PROFESSIONAL ENGINEER SEAL 054503 TYLER WINOKUR 9/9/2026

Dewberry
Dewberry Engineers Inc.
2610 Wycliff Road
Suite 410
Raleigh, NC 27607-3073
919.881.3000
NC License No. F-0929

DRAWN BY: KMS,JA,AF
CHECKED BY: TLW
APPROVED BY: TLW

WILLIARD STEWART ARCHITECTS
122 COX AVENUE
RALIGH, NC 27605
TEL: [919] 834.0620
FAX: [919] 834.2149
williardstewartarchitects.com

WAKE COUNTY
EMS STATION RENOVATIONS
NC STATE EMS | STATION 8
1361 VARSITY DRIVE
RALEIGH, NORTH CAROLINA 27606
OWNER: WAKE COUNTY FACILITIES DESIGN & CONSTRUCTION
PROJECT NUMBER: 50192457

CONSTRUCTION DOCUMENTS

DRAWING TITLE: ELECTRICAL NEW WORK

SHEET: 02-E111

DATE 7/31/2026

Docusign Envelope ID: 285601F9-68F4-8A4E-8082-5DF9805C5B93

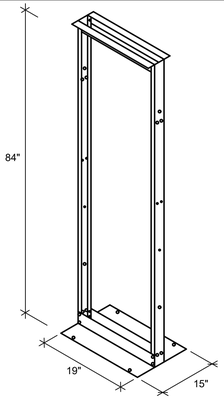

TELECOM EQUIPMENT RACK NOTES:

1. ALL MATERIALS SHALL BE CONTRACTOR FURNISHED AND INSTALLED UNLESS OTHERWISE SPECIFICALLY NOTED.
2. UNIT SHALL BE HIGH STRENGTH 6061-T6 ALUMINUM CONSTRUCTION. UNIT TO BE SELF-SUPPORTING AND RATED FOR 1000 LB LOAD CAPACITY.
3. UNIT TO HAVE EIA #12-24 ALTERNATING HOLE PATTERNS ON BOTH SIDES OF VERTICAL POSTS.
4. PROVIDE WEB CHANNEL HOLES AS SHOWN TO FACILITATE SIDE-BY-SIDE MOUNTING ATTACHMENT.
5. PROVIDE BLACK POWDER COAT FINISH OVER SURFACE TO INHIBIT OXIDATION.
6. UNIT TO BE MOUNTED IN POSITION AS SHOWN ON PLANS. SPACE RACK 6" FROM WALL TO ACCOMMODATE VERTICAL WIRE MANAGEMENT.
7. BOLT BASE SECURELY TO FLOOR. PROVIDE MOUNTING BRACKET TO SECURE TOP OF RACK TO WALL.
8. HORIZONTAL WIRE MANAGEMENT PANELS SHALL BE INSTALLED BETWEEN EVERY FIBER TRAY AND PATCH PANEL ON FRONT AND BACK OF RACK.
9. VERTICAL WIRE MANAGEMENT PANELS SHALL BE INSTALLED THE FULL LENGTH ON BOTH SIDES OF RACK.
10. OWNER ITS TO SUPPLY AND INSTALL ALL ELECTRONIC EQUIPMENT.
11. COORDINATE WITH WTCC ITS FOR FINAL LAYOUT OF RACK EQUIPMENT PRIOR TO BEGINNING WORK.
12. ALL GROUNDING CABLING IN CONDUIT. NO EXPOSED CABLING ALLOWED.

1 TELECOM EQUIPMENT RACK DETAIL — SCALE: NTS

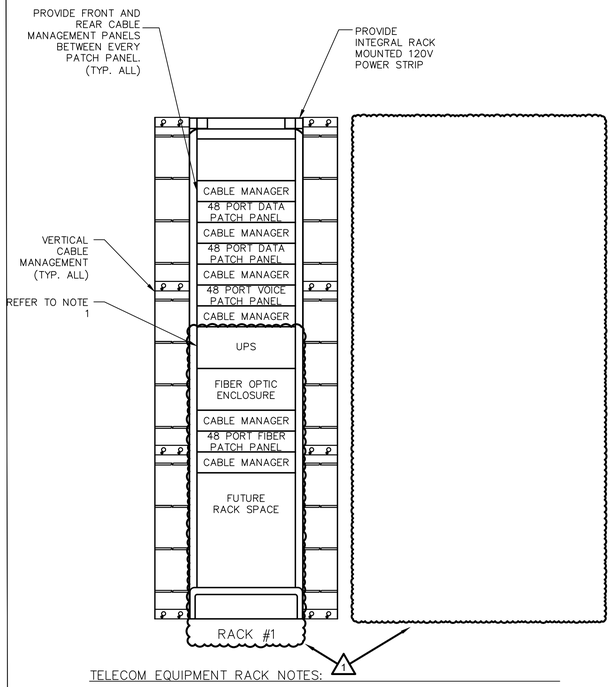

TELECOM EQUIPMENT RACK NOTES:

1. PROVIDE UPS WITH BACNET CARD. BASIS OF DESIGN SHALL BE VERTIV LIEBERT (#GXT5-20000LVRT2UXL) 2000VA RACK-MOUNTED UPS WITH VERTIV SNMP WEBCARD (#RDU101) FOR COMMS WITH EVRN SUPPORT AND RACK MOUNT KIT (#2UTELECOMRK1).

2 TELECOM EQUIPMENT RACK ELEVATION — SCALE: NTS

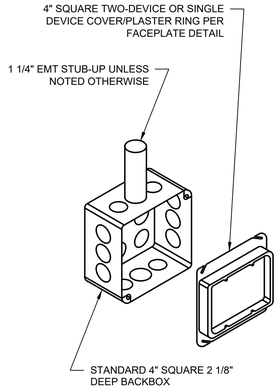

3 TELECOM OUTLET BOX DETAIL — SCALE: NTS

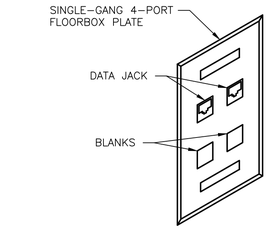

STANDARD OUTLET

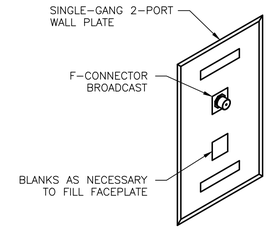

CATV OUTLET

4 TELECOM FACEPLATE DETAIL — SCALE: NTS

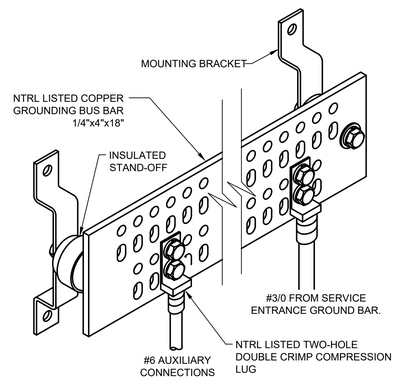

ISOMETRIC VIEW

TELECOM GROUNDING BUSBAR NOTES:

1. ALL GROUNDING CABLING IN CONDUIT. NO EXPOSED CABLING ALLOWED.
2. LABEL EACH BAR CONNECTION.

5 TELECOM GROUNDING BUSBAR — SCALE: NTS

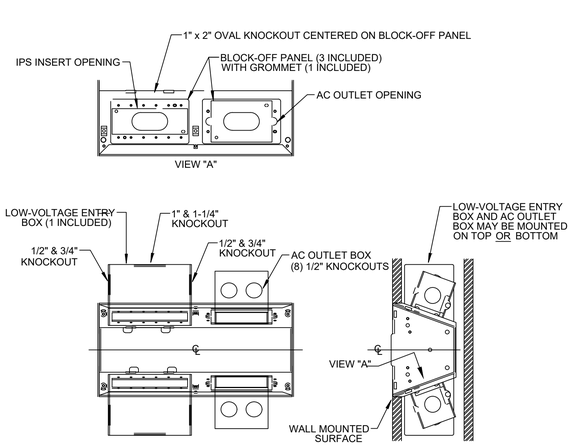

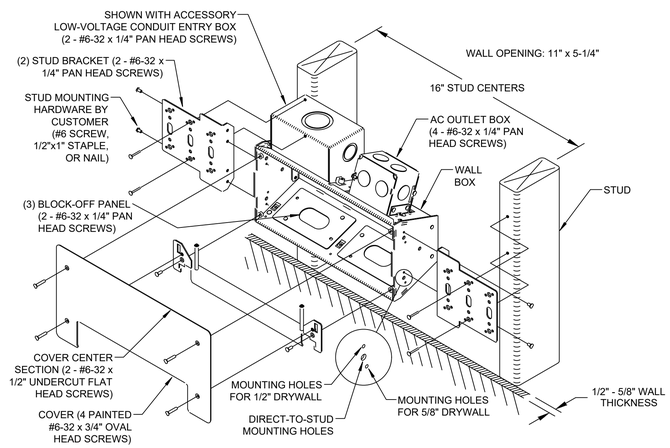

FLAT DISPLAY WALL BOX NOTES:

1. COORDINATE FINAL MOUNTING HEIGHT AND LOCATIONS WITH ARCHITECTURAL ELEVATIONS.
2. DEVICE SHALL BE MOUNTED CENTERED BEHIND FLAT PANEL MONITOR.
3. BASIS OF DESIGN: FSR 'PWR-100'

6 FLAT PANEL DISPLAY WALL BOX — SCALE: NTS

NO.	DESCRIPTION	DATE
1	Addendum No. 2	09/10/26

NORTH CAROLINA PROFESSIONAL ENGINEER SEAL 054503 TYLER WINOKUR 9/9/2026

Dewberry
Dewberry Engineers Inc.
2610 Wycliff Road
Suite 410
Raleigh, NC 27607-3073
(919) 881-0000
NC License No. F-0929

DRAWN BY: KMS,JA,AF
CHECKED BY: TLW
APPROVED BY: TLW

WILLIARD STEWART ARCHITECTS
122 COX AVENUE
RALEIGH, NC 27605
TEL: [919] 834.0620
FAX: [919] 834.2149
williardstewartarchitects.com

WAKE COUNTY
EMS STATION RENOVATIONS
NC STATE EMS | STATION 8
1361 VARSITY DRIVE
RALEIGH, NORTH CAROLINA 27606
OWNER: WAKE COUNTY FACILITIES DESIGN & CONSTRUCTION
PROJECT NUMBER: 50192457

CONSTRUCTION DOCUMENTS

DRAWING TITLE:
DETAILS

SHEET:
02-E502

DATE
7/31/2026

Docusign Envelope ID: 285601F9-68F4-8A4E-8082-5DF9805C5B93

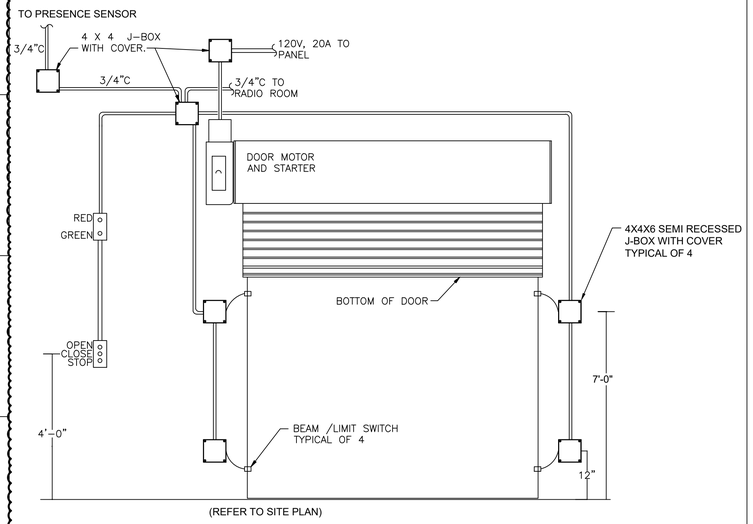

(REFER TO SITE PLAN)

1 OVERHEAD DOOR DETAIL — SCALE: NTS

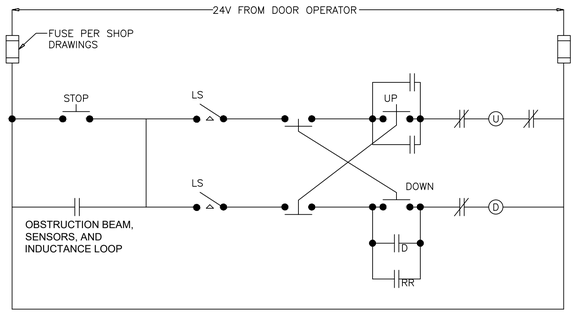

NOTES:

1. OVERHEAD DOORS ARE TO OPERATE FROM LOCAL WALL MOUNTED SWITCHES AND ALSO FROM MOBILE UNITS IN THE TRUCKS.
2. SEE POWER PLANS FOR EXACT QUANTITY OF MOTORS.
3. ONE SYSTEM EACH DOOR.

2 OVERHEAD DOOR CONTROL SCHEMATIC — SCALE: NTS

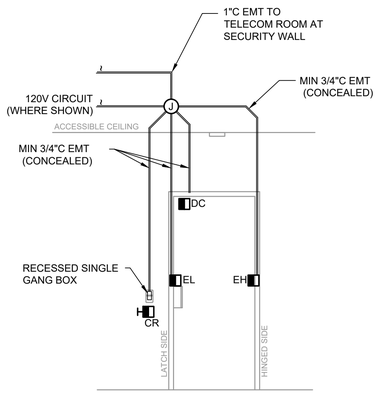

3 TYPICAL CARD ACCESS DOOR ROUGH-IN DETAIL — SCALE: NTS

NO.	DESCRIPTION	DATE
1	Addendum No. 2	09/10/26

NORTH CAROLINA PROFESSIONAL SEAL 054503 ENGINEER TYLER WINOKUR
9/9/2026

Dewberry
Dewberry Engineers Inc.
2610 Wycliff Road
Suite 410
Raleigh, NC 27607-3073
919.881.9939
NC License No. F-0929

DRAWN BY: KMS,JA,AF
CHECKED BY: TLW
APPROVED BY: TLW

WILLIARD STEWART ARCHITECTS
122 COX AVENUE
RALEIGH, NC 27605
TEL: [919] 834.0620
FAX: [919] 834.2149
williardstewartarchitects.com

WAKE COUNTY
EAST RALEIGH / KIDD ROAD | STATION 7
2910 KIDD ROAD
RALEIGH, NORTH CAROLINA 27610

OWNER: WAKE COUNTY FACILITIES DESIGN & CONSTRUCTION

PROJECT NUMBER: 50192457-01

CONSTRUCTION DOCUMENTS

DRAWING TITLE: DETAILS

SHEET: 02-E503

DATE 7/31/2026

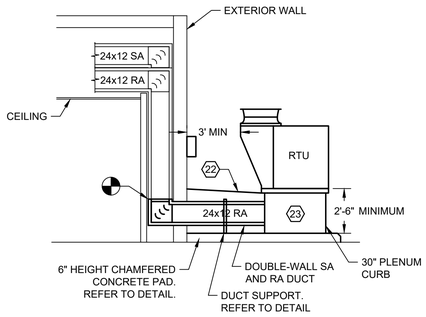

2 RTU SECTION

SCALE: 1/4" = 1'-0"

0' 2' 4' 8'

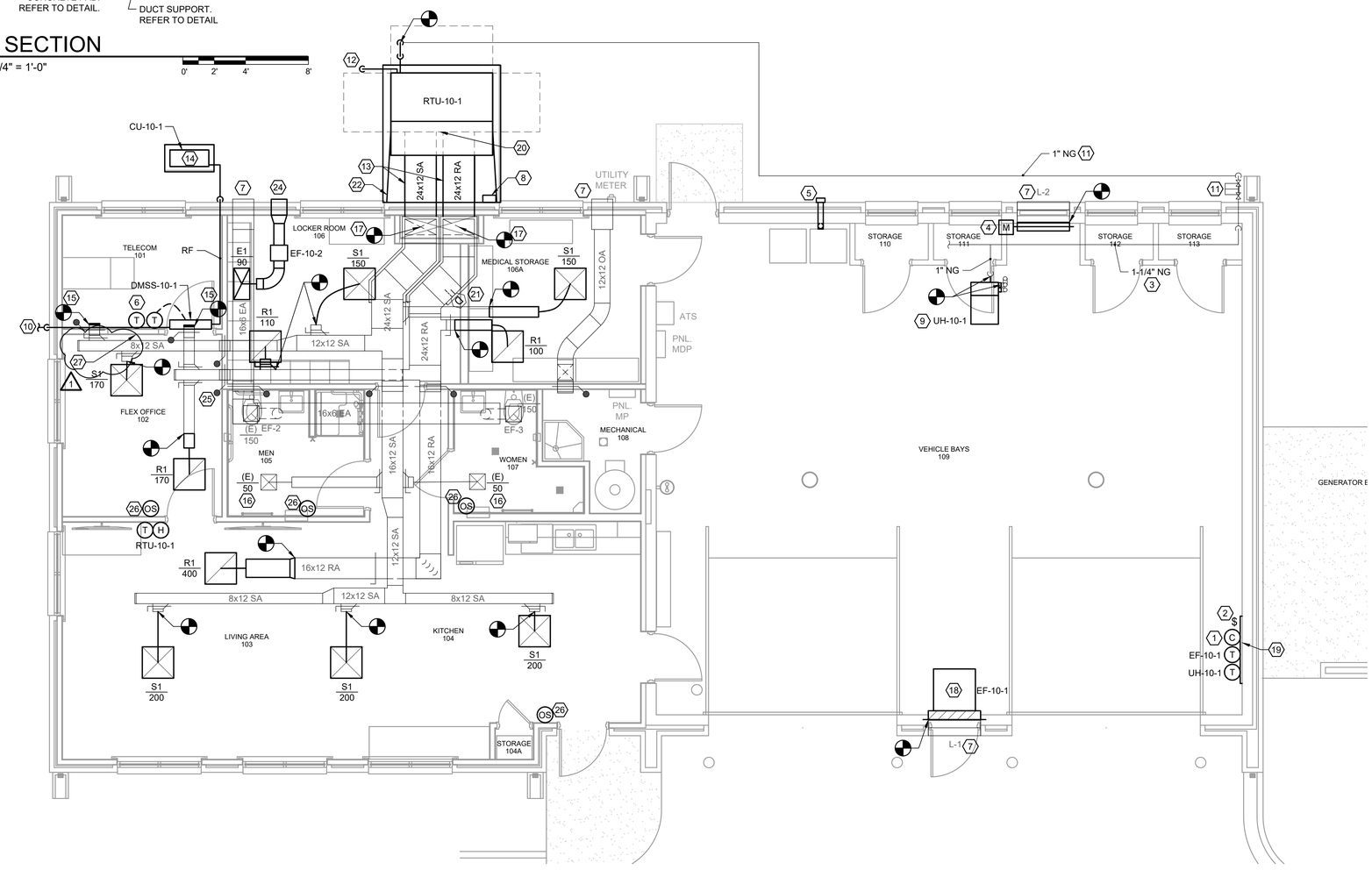

1 MECHANICAL NEW WORK

SCALE: 1/4" = 1'-0"

0' 2' 4' 8'

GENERAL NOTES

1. PROVIDE ALL SENSORS, DETECTORS, THERMOSTATS LOCATED IN THE VEHICLE BAY WITH WIRE GUARDS.
2. COMPLETE CLEANING OF AIR DISTRIBUTION SYSTEM PRIOR TO INSTALLATION OF NEW DUCTWORK AND DIFFUSERS. CLEAN IN ACCORDANCE WITH SPECIFICATION 233100.
3. FOUR OCCUPANCY SENSORS SHOWN FOR RTU OPERATION. SEE CONTROL SEQUENCE.
4. PROJECT IS SEISMIC DESIGN CATEGORY C AND WILL REQUIRE DELEGATED DESIGN FOR SEISMIC, WIND AND VIBRATION CONTROLS. REFER TO SPECIFICATION 230548 - HVAC SEISMIC, WIND AND VIBRATION CONTROLS.

KEY NOTES (#)

1. PROVIDE MACURCO CX-12 DUAL DETECTION CO/NO2 GAS DETECTOR (OR EQUAL) WITH REPLACEABLE SENSOR MODULES AND INTERLOCK WITH EF-10-1. REFER TO CONTROLS WIRING DIAGRAM.
2. PROVIDE TIMED OVERRIDE SWITCH AND INTERLOCK WITH EF-10-1.
3. EXISTING NG PIPING LOCATED 12' AFF WITHIN VEHICLE BAY.
4. PROVIDE MOTORIZED DAMPER AND INTERLOCK WITH EF-10-1 FAN STARTER. FIELD VERIFY LOUVER AND DUCT SIZE.
5. 4"Ø HOODED ALUMINUM WALL CAP WITH BACKDRAFT DAMPER. COORDINATE WITH DRYER LOCATION. BOTTOM OF DISCHARGE SHALL BE 24 INCHES OR MORE ABOVE FINISHED GRADE. PROVIDE 4" DIAMETER DRYER DUCT. DUCT SHALL BE SMOOTH SURFACE ALUMINUM.
6. PROVIDE SCHNEIDER SE8650 THERMOSTAT ADJACENT TO DMSS-10-1 THERMOSTAT FOR CONNECTION TO OWNER'S BAS SYSTEM. SE8650 THERMOSTAT WILL BE USED FOR TEMPERATURE MONITORING ONLY, NOT CONTROL OF THE DMSS.
7. EXISTING WALL CAP TO REMAIN.
8. RTU FUSED DISCONNECT.
9. PROVIDE NEW UNIT HEATER IN SAME LOCATION AS EXISTING. REUSE NATURAL GAS PIPING, COMBUSTION AND FLUE PIPE AS POSSIBLE FOR RECONNECTION TO NEW UNIT. PROVIDE THERMOSTAT AS SPECIFIED.
10. ROUTE ¾" CONDENSATE TO GROUND. PROVIDE WALL SUPPORT. TERMINATE CONDENSATE 12" ABOVE GROUND. PROVIDE CONCRETE SPLASHBLOCK.
11. EXISTING 1" BURIED NATURAL GAS PIPE. EXISTING GAS METER DELIVERS 7" WC PRESSURE. COORDINATE WITH UTILITY TO INCREASE DELIVERY PRESSURE TO 10" WC. CONFIRM EXISTING PIPE SIZE AND MATERIAL PRIOR TO RECONNECTION AND COORDINATE WITH ENGINEER/OWNER IF DIFFERENT.
12. DISCHARGE RTU CONDENSATE INTO EXISTING DRYWELL. CONFIRM DRYWELL LOCATION IN FIELD. NOTIFY OWNER/ENGINEER IF IT CANNOT BE LOCATED.
13. DOUBLE WALL DUCT.
14. CONDENSING UNIT WITH CONCRETE PAD. REFER TO CONDENSING UNIT DETAIL.
15. CAP, INSULATE AND SEAL DUCT.
16. REBALANCE EXISTING DIFFUSERS AS INDICATED.
17. SEE RTU SECTION DETAIL.
18. VEHICLE BAY EXHAUST FAN. REFER TO EXHAUST FAN DETAIL.
19. PROVIDE INSULATED BACK PANEL FOR VEHICLE BAY SENSORS.
20. MAINTAIN MINIMUM 6" SEPARATION BETWEEN DUCT PENETRATIONS INTO PLENUM CURB.
21. DUCT DETECTOR EXISTING TO REMAIN.
22. FIELD FABRICATED ALUMINUM DUCT ENCLOSURE WITH 18"X18" SIDE ACCESS DOOR. CROWN DUCT ENCLOSURE AT THE TOP SO THAT WATER SHEDS TO BOTH SIDES. SECURE TO EXISTING BRICK WALL WITH COUNTER FLASHING FRAME FASTENED TO THE BRICKWORK. INSTALL WEATHERPROOF SEALANT AND PATCH EXISTING WALL AS NEEDED. COORDINATE WITH ARCHITECT FOR MORE DETAIL ON WALL CONNECTION.
23. 30" PLENUM CURB. RETURN DUCT TO PENETRATE PLENUM CURB AND USE PLENUM CURB AS RETURN AIR PLENUM. SUPPLY AIR TO BE DIRECTLY DUCTED INTO RTU SUPPLY CONNECTION. PLENUM SHALL BE CONSTRUCTED WITH DIVIDER MID-WAY, BETWEEN SUPPLY AND RETURN PATH. DUCT CONNECTIONS TO CURB SHALL BE WATER TIGHT. SUPPLY DUCT INSULATION TO CONTINUE UNTIL RTU SUPPLY CONNECTION.
24. 12"x12" EXHAUST LOUVER. SEE ARCHITECTURAL PLANS FOR DETAIL.
25. EXISTING FIRE DAMPER. SEE ARCHITECTURAL PLANS FOR WALL RATINGS (TYP.).
26. PROVIDE WALL-MOUNTED OCCUPANCY SENSOR.
27. REFRIGERANT CHARGE NATURAL VENTILATION OPENING: 12" X 12" WALL MOUNTED LOUVER AT A MAXIMUM OF 12" AFF TO THE BOTTOM OF THE LOUVER.

1

NO.	DESCRIPTION	DATE
1	Addendum No. 2	9/10/26

NORTH CAROLINA PROFESSIONAL SEAL 061783 ENGINEER AYA C. CAMPBELL 9/9/26

Dewberry
Dewberry Engineers Inc.
2610 Wycliff Road
Suite 410
Raleigh, NC 27607-3073
919.881.3080
NC License No. F-0929

DRAWN BY: VALUE
CHECKED BY: VALUE
APPROVED BY: VALUE

WILLIARD STEWART ARCHITECTS
122 COX AVENUE
RALEIGH, NC 27605
TEL: [919] 834.0620
FAX: [919] 834.2149
williardstewartarchitects.com

WAKE COUNTY
EMS STATION RENOVATIONS | STATION 10
WAKE FOREST EMS | STATION 10
706 S. FRANKLIN STREET
WAKE FOREST, NORTH CAROLINA 27587

OWNER: WAKE COUNTY FACILITIES DESIGN & CONSTRUCTION

PROJECT NUMBER: 50192457

CONSTRUCTION DOCUMENTS

DRAWING TITLE: MECHANICAL NEW WORK

SHEET: 03-M111

DATE 7/31/2026

RTU SCHEDULE

MARK	SERVICE	TYPE	MANUFACTURER / MODEL	SUPPLY AIR FAN TYPE	SUPPLY AIR FAN COOLING AIR FLOW (CFM)	SUPPLY AIR FAN HEATING AIR FLOW (CFM)	SUPPLY AIR FAN ESP (IN WG)	OUTSIDE AIR INTAKE AIR FLOW (CFM)	COOLING SECTION EAT (Fdb/Fwb)	COOLING SECTION LAT (Fdb/Fwb)	COOLING SECTION TOTAL CAPACITY (MBH)	COOLING SECTION SENSIBLE CAPACITY (MBH)	COOLING SECTION IEER / ISMRE2	COOLING SECTION AMB. (F)	HOT GAS REHEAT EAT (F)	HOT GAS REHEAT LAT (F)	HOT GAS REHEAT CAPACITY (MBH)	HEATING SECTION GAS EAT (F)	HEATING SECTION GAS LAT (F)	HEATING SECTION GAS CAPACITY (MBH)	HEATING SECTION GAS INPUT (MBH)	HEATING SECTION GAS OUTPUT (MBH)	HEATING SECTION GAS MAX OUTPUT (MBH)	HEATING SECTION GAS EFF. (%)	HEATING SECTION GAS REQD INPUT PRESS (IN. W.C.)	HEAT PUMP CAPACITY (MBH)	HEAT PUMP COP	HEAT PUMP AMB. (F)	FILTRATION TYPE & THICKNESS	FILTRATION EFF. (MERV)	ELECTRICAL MCA (A)	ELECTRICAL MOCP (A)	ELECTRICAL VOLTAGE/ PHASE	DIMENSIONS AND WEIGHT FOOTPRINT (IN x IN)	DIMENSIONS AND WEIGHT HEIGHT (IN)	DIMENSIONS AND WEIGHT WEIGHT (LBS)	NOTES
RTU-10-1	NC STATE - STATION 10	PACKAGED UNIT	CAPTIVEAIRE / PARAGON	PLENUM	1,170	1,170	1.25	440	82.5 / 67.7	53.5 / 53.0	60.0	40.0	17.9 / 6.4	95.0	53.0	75.1	28.4	53.0	85.0	45.0	16.9	13.7	52.0	81%	7 - 14	31.3	3.5	18.0	2" PLEATED PANEL	13	54	60	240/1	74 x 64	58	1,356	1,2,3,4,5,6,7,8,9,10,11,12,13

NOTES:

1. REFER TO SECTION 236213 FOR ADDITIONAL REQUIREMENTS. REFER TO UNIT DETAILS AND DIAGRAMS FOR COMPLETE CONFIGURATION AND DIMENSIONAL DETAILS.
2. MAX. COOLING COIL FACE VELOCITY = 500 FPM.
3. PROVIDE SINGLE-POINT ELECTRICAL CONNECTION AND FUSED-DISCONNECT SWITCH.
4. COILS APD'S ARE BASED ON THE MAX. SUPPLY FAN AIRFLOW.
5. PROVIDE NEW CONCRETE PAD THAT IS 6-INCHES LONGER AND WIDER THAN UNIT FOOTPRINT AND 6-INCHES DEEP WITH 4-INCHES DEEP CRUSHED STONE BASE. REFER TO DETAIL.
6. PROVIDE WITH MODULATING HOT GAS REHEAT COIL, HAIL GUARDS, 2" CLOSE CELL FOAM PANEL INSULATION AND DOUBLE WALLED CASING.
7. BOTTOM DISCHARGE CONFIGURATION. PROVIDE MIMIMUM 30 INCH HEIGHT DUCT CURB. PROVIDE 2-INCH R-10 CURB INSULATION. PROVIDE WITH SOLID METAL INTERIOR LINER. PROVIDE SEPARATION PANEL BETWEEN SUPPLY AND RETURN AIR PATH.
8. PROVIDE WITH GAS AUXILIARY / EMERGENCY HEAT STAINLESS STEEL HIGH EFFICEINCY FURNACE HEAT EXCHANGER WITH MODULATING OR STEP CONTROLLER.
9. PROVIDE MODULATING COMPRESSOR.
10. PROVIDE PACKAGE UNIT CONTROLLER WITH AUXILIARY RELAY TO START RESTROOM EXHAUST FANS BASED ON OCCUPANCY.
11. PROVIDE WITH BACNET IP CARD.
12. PROVIDE WITH HAIL GUARD.
13. PROJECT IS SEISMIC DESIGN CATEGORY C AND WILL REQUIRE DELEGATED DESIGN FOR SEISMIC, WIND AND VIBRATION CONTROLS. PROVIDE UNIT SPECIFIC SEISMIC, WIND AND VIBRATION CONTROLS AS NEEDED.

DUCTLESS MINI-SPLIT UNIT SCHEDULE

MARK (INDOOR UNIT)	MARK (OUTDOOR UNIT)	SERVICE	TYPE	MANUFACTURER / MODEL INDOOR & OUTDOOR	REFRIG. TYPE	MAXIMUM REFRIG. CHARGE (LBS)	COOLING TOT. CAP. (MBH)	COOLING SENS. CAP. (MBH)	COOLING SEER/EER (BTUH/W)	HEAT PUMP AMB. (F)	HEAT PUMP CAPACITY (MBH)	HEAT PUMP HSPF/ COP	HEAT PUMP AMB. (F)	ELECTRICAL - OUTDOOR UNIT MCA (A)	ELECTRICAL - OUTDOOR UNIT MOCP (A)	ELECTRICAL - OUTDOOR UNIT VOLTAGE/ PHASE	MAX. EQUIV. PIPE LENGTHS HEIGHT (FT)	MAX. EQUIV. PIPE LENGTHS LENGTH (FT)	DIMENSIONS AND WEIGHT - OUTDOOR FOOTPRINT (IN x IN)	DIMENSIONS AND WEIGHT - OUTDOOR HEIGHT (IN)	DIMENSIONS AND WEIGHT - OUTDOOR WEIGHT (LBS)	NOTES
DMSS-10-1	CU-10-1	TELECOM 101	WALL MOUNTED / HEAT PUMP	MITSUBISHI / PKA & PUZ 1.5 TON	R-454B	4.5	18.0	10.8	19.5/11	95	11.7	8.9 / 2.4	17	16	27	240/1	100	100	34 x 11	24	100	1,2,3,4,5,6,7,8,9

NOTES:

1. REFER TO SECTION 238116 FOR ADDITIONAL REQUIREMENTS.
2. SOUND PERFORMANCE IS BASED ON SOUND PRESSURE LEVELS MEASURED AT 3 FEET FROM UNIT AT FULL CAPACITY IN ACCORDANCE WITH AHRI 270 AND 350.
3. ALL UNITS SHALL MEET OR EXCEED SEASONAL ENERGY EFFICIENCY RATIO (SEER).
4. SIZE REFRIGERANT PIPING PER MANUFACTURER'S RECOMMENDATIONS.
5. PROVIDE SINGLE-POINT POWER CONNECTION. PROVIDE FUSED-DISCONNECT SWITCH FOR OUTDOOR UNIT. PROVIDE MOTOR-RATED DISCONNECT SWITCH FOR INDOOR UNIT.
6. PROVIDE WITH WIND BAFFLES AND LOW AMBIENT OPTION TO ENABLE COOLING DOWN TO 20°F OAT.
7. PROVIDE WIRED THERMOSTAT / TEMPERATURE SENSOR AS INDICATED. WIRELESS REMOTE CONTROLS ARE NOT ACCEPTABLE.
8. CONDENSING UNIT COIL SHALL BE COPPER TUBING.
9. PROVIDE WITH REFRIGERANT LEAK MITIGATION. 1

FAN SCHEDULE

MARK	SERVICE	TYPE	MANUFACTURER / MODEL	AIR FLOW (CFM)	ESP (IN WG)	EC MOTOR (Y or N)	DRIVE TYPE	SPEED (RPM)	BRAKE MOTOR (HP)	NOMINAL MOTOR (HP)	MAX. SOUND (SONES)	DAMPER TYPE	FLA (A)	MCA (A)	MOCP (A)	VOLTAGE/ PHASE	STARTER/ DSCNNCT MEANS	NOTES
EF-10-1	STATION 10 VEHICLE BAY	PROPELLER WALL FAN	GREENHECK / BAER	2,800	0.40	NO	BELT	1571	0.81	1.00	31	GRAVITY	16	20	35	120/1	MRS	1,2,3,4,5,6,7
EF-10-2	STATION 10 LOCKER ROOM	IN-LINE CABINET	GREENHECK / SQ-70	90	0.30	NO	DIRECT	1442	0.02	1/15	4	GRAVITY	1.3	1.6	15	120/1	MRS	1,2,4,8

NOTES:

1. REFER TO SECTION 233400 FOR ADDITIONAL REQUIREMENTS.
2. PROVIDE STARTING AND DISCONNECTING MEANS AS SCHEDULED. (MRS = MOTOR RATED SWITCH)
3. PROVIDE CARBON MONOXIDE AND NITROGEN DIOXIDE DETECTORS. ACTIVATE FAN UPON DETECTION OF CARBON MONOXIDE OR NITROGEN DIOXIDE EXCEEDING 25PPM.
4. PROVIDE HANGING BRACKETS WITH VIBRATION ISOLATION.
5. PROVIDE WALL MOUNTED PUSHBUTTON TIMER SWITCH FOR EXHAUST FANS INTERLOCKED WITH GAS DETECTOR.
6. PROVIDE WALL COLLAR WITH MOTOR SIDE OSHA APPROVED GUARD.
7. PROVIDE FACTORY MOUNTED MOTOR ACCESSIBLE BETWEEN OCCUPIED SPACE AND FAN BLADES.
8. PROVIDE SPEED CONTROL.

AIR DISTRIBUTION SCHEDULE

MARK	SERVICE	TYPE	MANUFACTURER / SERIES	MATERIAL	COLOR	PATTERN	MAX. AIR FLOW (CFM)	FACE SIZE (IN x IN)	NECK SIZE (IN x IN)	APD (IN WG)	MAX. SOUND (NC)	NOTES
S1	SUPPLY	SQUARE PERFORATED FACE	TITUS PSS-AA	ALUMINUM	WHITE	4-WAY	100	24 x 24	6	0.10	25	1-4
							200		8	0.10		
R1 / E1	RETURN/EXHAUST	SQUARE PERFORATED FACE	TITUS PAR-AA	ALUMINUM	WHITE	N/A	200	24 x 24	8	0.10	20	1-4
							325	24 x 24	10	0.10		
							450	24 x 24	12	0.10		
							600	24 x 24	14	0.10		
(E)	EXISTING DIFFUSER BALANCE TO AIRFLOW INDICATED.											

NOTES:

1. REFER TO SECTION 233713 FOR ADDITIONAL REQUIREMENTS.
2. SOUND LEVELS SHALL BE BASED ON ASHRAE 70.
3. VERIFY MOUNTING FRAME STYLE WITH ARCHITECTURAL REFLECTED CEILING PLANS, FINISH SCHEDULES AND EXISTING CEILINGS.
4. DUCT BRANCH FROM MAIN TAKEOFF TO AIR INLET / OUTLET SHALL MATCH SCHEDULED NECK SIZE UNLESS OTHERWISE NOTED.

UNIT HEATER SCHEDULE

MARK	SERVICE	TYPE	MANUFACTURER / MODEL	FAN AIR FLOW (CFM)	FAN MOTOR (HP)	FAN VOLTAGE/ PHASE	FUEL-FIRED EAT (F)	FUEL-FIRED LAT (F)	FUEL-FIRED FUEL TYPE	FUEL-FIRED INPUT (MBH)	FUEL-FIRED OUTPUT (MBH)	FUEL-FIRED EFF. (%)	NOTES
UH-10-1	VEHICLE BAY	HORIZONTAL UNIT HEATER	MODINE / HDS	1490	1/6	240/1	55	105	NAT. GAS	100.0	82.0	82%	1,2,3,4,5

NOTES:

1. REFER TO SECTION 238239 FOR ADDITIONAL REQUIREMENTS.
2. PROVIDE MOTOR-RATED DISCONNECT SWITCH.
3. PROVIDE FACTORY-FABRICATED WALL/CEILING SUPPORT.
4. PROVIDE WITH LINE-VOLTAGE THERMOSTAT WITH FAN AUTO OR ON SELECTION SWITCH.
5. PROVIDE FLUE AND COMBUSTION AIR DUCT.

DMSS-10-1 REFRIGERANT CALCULATIONS

MAXIMUM REFRIGERANT CHARGE CALCULATION

UNIT INFO UNIT TAG	RELEASABLE LBS	OCCUPANCY CLASSIFICATION	REFRIGERANT DATA REFREIGERANT TYPE	SAFETY GROUP	RCL (LB/1000 CUFT)	TOTAL VOLUME (CUFT)	MAXIMUM ALLOWABLE QUANTITY RCL (LBS)	ROOM INFO NUMBER	NAME	AREA (SQFT)	HEIGHT (FT)	VOLUME (CUFT)
								1	TELECOM	77	8	616
								2	OFFICE	118	8	944
TELECOM DMSS	4.375	COMMERCIAL	R-454B	A2L	3.1	1560	4.836					

NOTE: SEE "NATURAL VENTILATION OPENING FOR GROUP A2L REFRIGERANTS (ASHRAE 15-2022 7.2.3.2.2)" CALCULATION FOR THE METHOD OF CLASSIFYING THE ADJACENT FLEX OFFICE AS A CONNECTING SPACE VIA NATURAL VENTILATION.

NATURAL VENTILATION OPENING FOR GROUP A2L REFRIGERANTS (ASHRAE 15-2022 7.2.3.2.2)

UNIT INFO UNIT TAG	RELEASABLE QTY (m,rel)	MAXIMUM ALLOWABLE QTY IN TELECOM ROOM ALONE (m,room)	REFRIGERANT DATA REFREIGERANT TYPE	SAFETY GROUP	LFL (LB/1000 CUFT)	MOLAR MASS (M)	TELECOM ROOM INFO NAME	AREA (SQFT)	HEIGHT (FT)	VOLUME (CUFT)	MINIMUM VENTILATION OPENING AREA (A,vent) (sq ft)
TELECOM DMSS	4.375	1.9096	R-454B	A2L	22	62.6	TELECOM	77	8	616	0.410

NOTE: USING THE NATURAL VENTILATION OPENING FOR A2L REFRIGERANT EQUATION IN ASHRAE 15-2022 IN SECTION 7.2.3.2.2, WE CALCULATE THE MINIMUM VENTILATION OPENING SIZE OF A LOUVER CONNECTING THE TELECOM ROOM AND ADJACENT OFFICE TO BE ABLE TO UTILIZE ITS AREA AS A CONNECTED SPACE IN OUR MAXIMUM ALLOWABLE VOLUME CALCULATIONS.

1

NO.	DESCRIPTION	DATE
1	Addendum No. 2	9/10/26

NORTH CAROLINA PROFESSIONAL SEAL 061183 ENGINEER AYA C. CAMPBELL 9/9/26

Dewberry
Dewberry Engineers Inc.
2610 Wycliff Road
Suite 410
Raleigh, NC 27607-3073
(919) 881-3080
NC License No. F-0929

DRAWN BY: VALUE
CHECKED BY: VALUE
APPROVED BY: VALUE

WILLIARD STEWART ARCHITECTS
122 COX AVENUE
RALEIGH, NC 27605
TEL: [919] 834.0620
FAX: [919] 834.2149
williardstewartarchitects.com

WAKE COUNTY
EMS STATION RENOVATIONS | STATION 10
WAKE FOREST EMS | STATION 10
706 S. FRANKLIN STREET
WAKE FOREST, NORTH CAROLINA 27587
OWNER: WAKE COUNTY FACILITIES DESIGN & CONSTRUCTION
PROJECT NUMBER: 50192457

CONSTRUCTION DOCUMENTS

DRAWING TITLE: SCHEDULES

SHEET: 03-M601

DATE 7/31/2026

Docusign Envelope ID: FCA0763A-0E35-8DD6-8236-C0DC3E30E26B

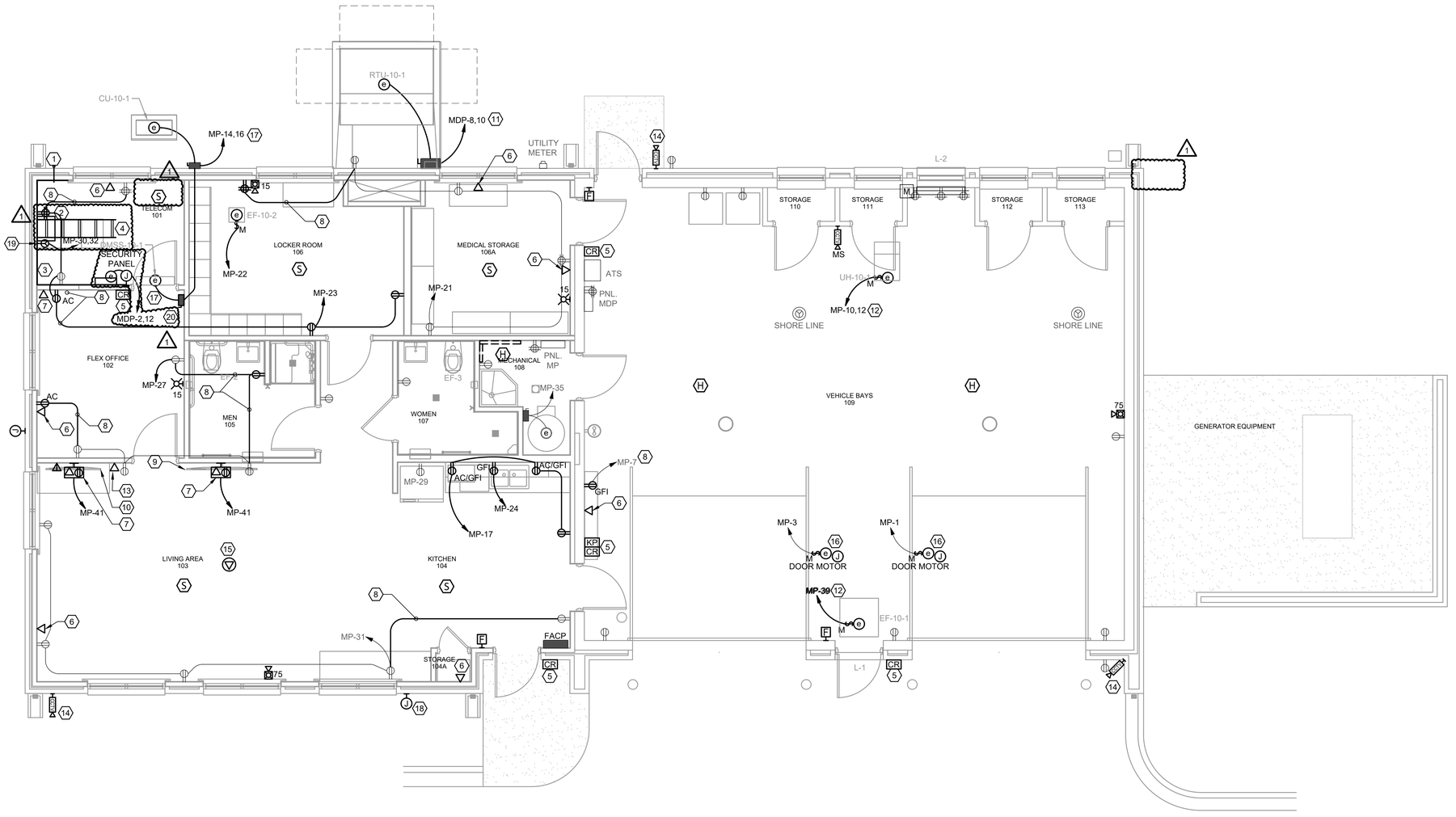

1 ELECTRICAL NEW WORK

SCALE: 1/4" = 1'-0"

0' 2' 4' 8'

GENERAL NOTES

1. REFER TO SHEET E001 AND E002 FOR ADDITIONAL NOTES.
2. DIVISION 26 CONTRACTOR SHALL COORDINATE FINAL POWER AND EQUIPMENT REQUIREMENTS WITH DIVISION 08 CONTRACTOR.

KEY NOTES

1. CONTRACTOR SHALL PROVIDE AND INSTALL CONDUITS FROM UTILITY DEMARCATION POINT BY ROADSIDE TO TELECOM 101. REFER TO TELECOM RISER FOR CONDUIT SIZE AND DETAILS.
2. PROVIDE AND INSTALL TWO POST TELECOM EQUIPMENT RACK. BASIS OF DESIGN: CHATSWORTH 19" TWO POST RACK (55053-103). MOUNT PER MANUFACTURER RECOMMENDED METHODS.
3. CONTRACTOR SHALL PROVIDE AND INSTALL 3/4" FIRE RETARDANT PLYWOOD ON THREE WALLS MOUNTED AT 12" AFF AND SHALL EXTEND TO 108" AFF.
4. PROVIDE AND INSTALL LADDER TRAY. BASIS OF DESIGN: CHATSWORTH 12" LADDER TRAY (11275-13). MOUNT PER MANUFACTURER RECOMMENDED METHODS. SEE SPECIFICATIONS FOR ADDITIONAL INFORMATION.
5. NEW CARD READER AND CARD READER COMBO /WITH KEYPAD CONTRACTOR SHALL PROVIDE AND INSTALL (1) 1" CONDUIT FROM CARD READER LOCATION SHOWN ON DRAWINGS CONTRACTOR SHALL MOUNT (1) 4"X4" SQUARE BACKBOX WITH A SINGLE GANG MUD RING AND A 1" CONDUIT ROUTED TO ABOVE THE ACCESSIBLE CEILING BACK TO TELECOM 101. REFER TO THE SPECIFICATIONS FOR ADDITIONAL INFORMATION.
6. EXISTING WALL MOUNTED OUTLETS CONTRACTOR SHALL PROVIDE AND INSTALL NEW CAT 6 DATA CABLE ROUTED TO TELECOM 101 AND REUSE THE EXISTING PATCH PANELS, CONNECTORS AND FACEPLATES REFER TO THE SPECIFICATIONS FOR ADDITIONAL INFORMATION.
7. NEW WALL MOUNTED DATA OUTLETS CONTRACTOR SHALL PROVIDE AND INSTALL (1) 1" CONDUIT AND BACK-BOX IN THE WALL AND NEW CAT 6 DATA CABLE, FACEPLATE AND CONNECTOR ROUTED TO TELECOM 101 AND REUSE THE EXISTING PATCH PANELS. REFER TO THE DETAIL SHEET E501 AND SPECIFICATIONS FOR ADDITIONAL INFORMATION.
8. CONTRACTOR SHALL MODIFY AND EXTEND BRANCH CIRCUIT WIRING AND CONDUIT BETWEEN EXISTING TO REMAIN AND NEW RECEPTACLES.
9. CONTRACTOR SHALL PROVIDE AND INSTALL A NEW 65" TV AND ALL MOUNTING HARDWARE PER THE MANUFACTURER'S RECOMMEND INSTILLATION SEE DETAIL SHEET E502 SPECIFICATIONS FOR ADDITIONAL INFORMATION.
10. CONTRACTOR SHALL PROVIDE AND INSTALL A NEW 50" TV AND ALL MOUNTING HARDWARE PER THE MANUFACTURER'S RECOMMEND INSTALLATION SEE DETAIL SHEET E502 SPECIFICATIONS FOR ADDITIONAL INFORMATION.
11. PROVIDE NEW EQUIPMENT CONNECTION (WIRING AND CONDUIT) FOR NEW MECHANICAL EQUIPMENT, REFER TO PANEL SCHEDULE(S) FOR CIRCUIT SIZING.
12. CONTRACTOR TO PROVIDE 2#12, 1#12 IN 3/4"C FOR NEW MECHANICAL EQUIPMENT.
13. TIME CLOCK OUTLET: CONTRACTOR SHALL PROVIDE AND INSTALL 1" CONDUIT AND BACK-BOX IN THE WALL AND NEW CAT 6 DATA CABLE, FACEPLATE AND CONNECTOR ROUTED TO TELECOM 101 AND REUSE THE EXISTING PATCH PANELS. REFER TO THE DETAIL SHEET E501 AND SPECIFICATIONS FOR ADDITIONAL INFORMATION
14. CAMERA LOCATION: CONTRACTOR SHALL PROVIDE AND INSTALL 3/4" CONDUIT AND BACK-BOX IN THE CEILING ROUTED BACK TO TELECOM 101
15. WIRELESS ACCESS POINT: CONTRACTOR SHALL PROVIDE AND INSTALL 1" CONDUIT AND BACK-BOX WITH A FACEPLATE AND CONNECTOR IN THE CEILING ROUTED BACK TO TELECOM 101 AND MOUNT THE OWNER PROVIDE WIRELESS ACCESS POINT.
16. CONTRACTOR SHALL PROVIDE JUNCTION BOX AT 42" AFF. PROVIDE 5#12 IN 3/4"C CONDUIT UP TO DOOR CONTROLLER FOR GARAGE UP/DOWN/STOP WIRING AND POWER. CONTROL BUTTONS SHALL BE PROVIDED BY DIVISION 8 CONTRACTOR.
17. CONTRACTOR TO PROVIDE 2#6, #10G IN 1"C FOR NEW MECHANICAL EQUIPMENT. COORDINATE FINAL DISCONNECT MOUNTING LOCATION WITH DIVISION 23 CONTRACTOR.
18. PROVIDE A NEW EXTERIOR MOUNTED, WEATHERPROOF JUNCTION BOX AT HEIGHT OF APPROXIMATELY 72" AFG. ROUTE NEW 3/4" CONDUIT PENETRATION THRU EXTERIOR WALL. PROVIDE GROMMETS ON INSIDE CONDUIT END FOR CABLE PROTECTION. COORDINATE WITH OWNER FOR FINAL LOCATION AND MOUNTING BEFORE ROUGH-IN.
19. NEW NEMA L6-20R POWER RECEPTACLE FOR TELECOM CABINET EQUIPMENT, MOUNT AT 96" A.F.F.
20. SECURITY PANEL FURNISHED BY OTHERS. BASIS OF DESIGN: PROTUS3 SECURITY PANEL. ELECTRICAL CONTRACTOR SHALL PROVIDE (2) NEW QUAD RECEPTACLES AND NEW WIREWAY TROUGH INSIDE SECURITY PANEL. COORDINATE INSTALLATION WITH SECURITY CONTRACTOR.

NO.	DESCRIPTION	DATE
1	Addendum No. 2	09/10/26

NORTH CAROLINA PROFESSIONAL ENGINEER SEAL 054503 TYLER WINGHUR
9/9/2026

Dewberry
Dewberry Engineers Inc.
2610 Wycliff Road
Suite 410
Raleigh, NC 27607-3073
(919) 881-3000
NC License No. F-0929

DRAWN BY: KMS,JA,AF
CHECKED BY: TLW
APPROVED BY: TLW

WILLIARD STEWART ARCHITECTS
122 COX AVENUE
RALEIGH, NC 27605
TEL: [919] 834.0620
FAX: [919] 834.2149
williardstewartarchitects.com

WAKE COUNTY
EMS STATION RENOVATIONS
WAKE FOREST EMS | STATION 10
706 S. FRANKLIN STREET
WAKE FOREST, NORTH CAROLINA 27587
OWNER: WAKE COUNTY FACILITIES
DESIGN & CONSTRUCTION
PROJECT NUMBER: 50192457

CONSTRUCTION DOCUMENTS

DRAWING TITLE: ELECTRICAL NEW WORK

SHEET: 03-E111

DATE 7/31/2026

Docusign Envelope ID: FCA0763A-0E35-8DD6-8236-C0DC3E30E26B

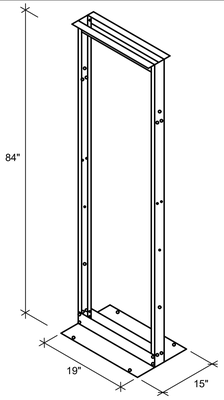

TELECOM EQUIPMENT RACK NOTES:

1. ALL MATERIALS SHALL BE CONTRACTOR FURNISHED AND INSTALLED UNLESS OTHERWISE SPECIFICALLY NOTED.
2. UNIT SHALL BE HIGH STRENGTH 6061-T6 ALUMINUM CONSTRUCTION. UNIT TO BE SELF-SUPPORTING AND RATED FOR 1000 LB LOAD CAPACITY.
3. UNIT TO HAVE EIA #12-24 ALTERNATING HOLE PATTERNS ON BOTH SIDES OF VERTICAL POSTS.
4. PROVIDE WEB CHANNEL HOLES AS SHOWN TO FACILITATE SIDE-BY-SIDE MOUNTING ATTACHMENT.
5. PROVIDE BLACK POWDER COAT FINISH OVER SURFACE TO INHIBIT OXIDATION.
6. UNIT TO BE MOUNTED IN POSITION AS SHOWN ON PLANS. SPACE RACK 6" FROM WALL TO ACCOMMODATE VERTICAL WIRE MANAGEMENT.
7. BOLT BASE SECURELY TO FLOOR. PROVIDE MOUNTING BRACKET TO SECURE TOP OF RACK TO WALL.
8. HORIZONTAL WIRE MANAGEMENT PANELS SHALL BE INSTALLED BETWEEN EVERY FIBER TRAY AND PATCH PANEL ON FRONT AND BACK OF RACK.
9. VERTICAL WIRE MANAGEMENT PANELS SHALL BE INSTALLED THE FULL LENGTH ON BOTH SIDES OF RACK.
10. OWNER ITS TO SUPPLY AND INSTALL ALL ELECTRONIC EQUIPMENT.
11. COORDINATE WITH WTCC ITS FOR FINAL LAYOUT OF RACK EQUIPMENT PRIOR TO BEGINNING WORK.
12. ALL GROUNDING CABLING IN CONDUIT. NO EXPOSED CABLING ALLOWED.

1 TELECOM EQUIPMENT RACK DETAIL — SCALE: NTS

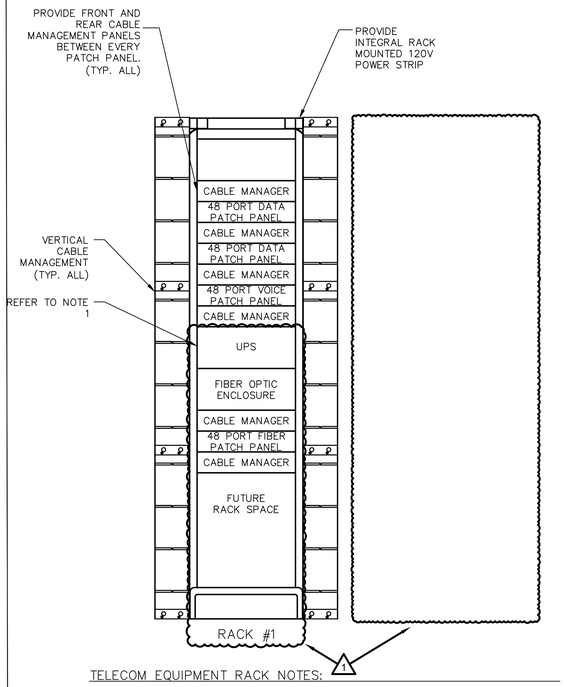

TELECOM EQUIPMENT RACK NOTES:

1. PROVIDE UPS WITH BACNET CARD. BASIS OF DESIGN SHALL BE VERTIV LIEBERT (#GXT5-20000LVRT2UXL) 2000VA RACK-MOUNTED UPS WITH VERTIV SNMP WEBCARD (#RDU101) FOR COMMS WITH EVRN SUPPORT AND RACK MOUNT KIT (#2UTELECOMRKI).

2 TELECOM EQUIPMENT RACK ELEVATION — SCALE: NTS

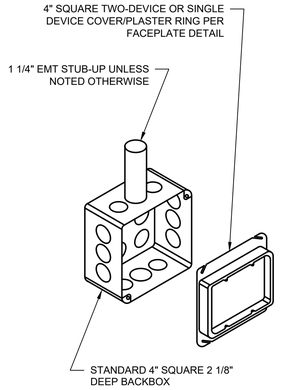

3 TELECOM OUTLET BOX DETAIL — SCALE: NTS

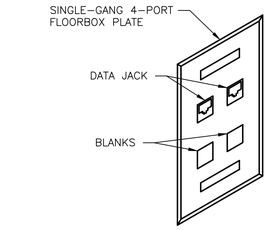

STANDARD OUTLET

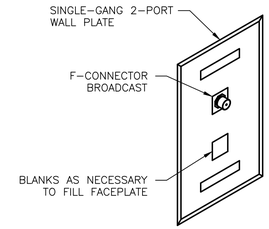

CATV OUTLET

4 TELECOM FACEPLATE DETAIL — SCALE: NTS

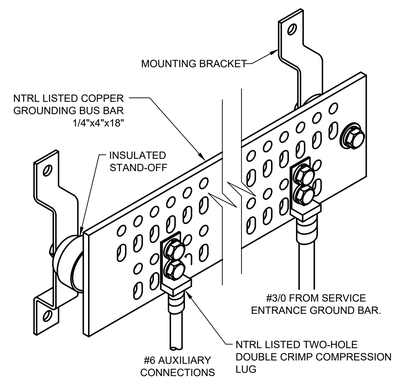

ISOMETRIC VIEW

TELECOM GROUNDING BUSBAR NOTES:

1. ALL GROUNDING CABLING IN CONDUIT. NO EXPOSED CABLING ALLOWED.
2. LABEL EACH BAR CONNECTION.

5 TELECOM GROUNDING BUSBAR — SCALE: NTS

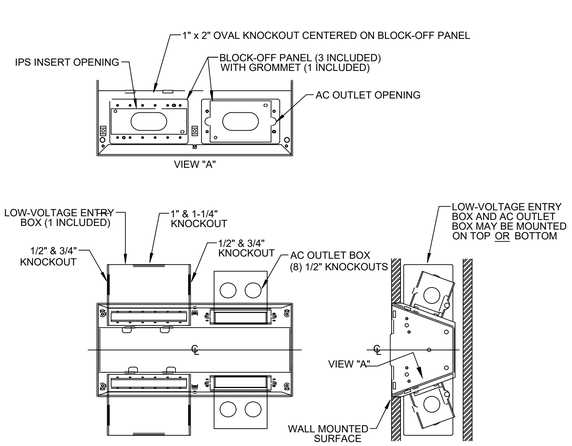

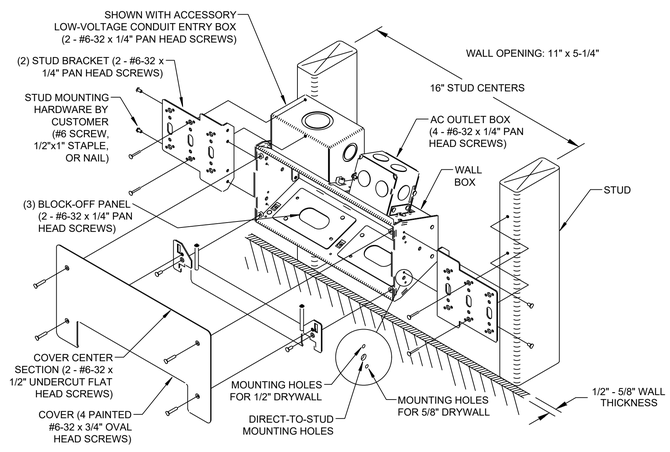

FLAT DISPLAY WALL BOX NOTES:

1. COORDINATE FINAL MOUNTING HEIGHT AND LOCATIONS WITH ARCHITECTURAL ELEVATIONS.
2. DEVICE SHALL BE MOUNTED CENTERED BEHIND FLAT PANEL MONITOR.
3. BASIS OF DESIGN: FSR 'PWR-100'

6 FLAT PANEL DISPLAY WALL BOX — SCALE: NTS

NO.	DESCRIPTION	DATE
1	Addendum No. 2	09/10/26

NORTH CAROLINA PROFESSIONAL ENGINEER SEAL 054503 TYLER WINDHAM — 9/9/2026

Dewberry
Dewberry Engineers Inc.
2610 Wycliff Road
Suite 410
Raleigh, NC 27607-3073
919.881.3000
NC License No. F-0929

DRAWN BY: KMS,JA,AF
CHECKED BY: TLW
APPROVED BY: TLW

WILLIARD STEWART ARCHITECTS
122 COX AVENUE
RALEIGH, NC 27605
TEL: [919] 834.0620
FAX: [919] 834.2149
williardstewartarchitects.com

WAKE COUNTY
EMS STATION RENOVATIONS
WAKE FOREST EMS | STATION 10
706 S. FRANKLIN STREET
WAKE FOREST, NORTH CAROLINA 27587

PROJECT NUMBER: 50192457

OWNER: WAKE COUNTY FACILITIES
DESIGN & CONSTRUCTION

CONSTRUCTION DOCUMENTS

DRAWING TITLE:
DETAILS

SHEET:
03-E502

DATE
7/31/2026

Docusign Envelope ID: FCA0763A-0E35-8DD6-8236-C0DC3E30E26B

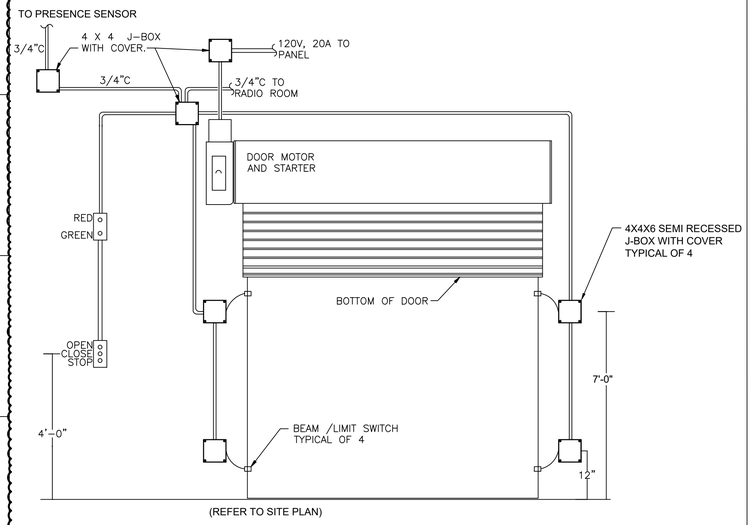

1 OVERHEAD DOOR DETAIL

SCALE: NTS

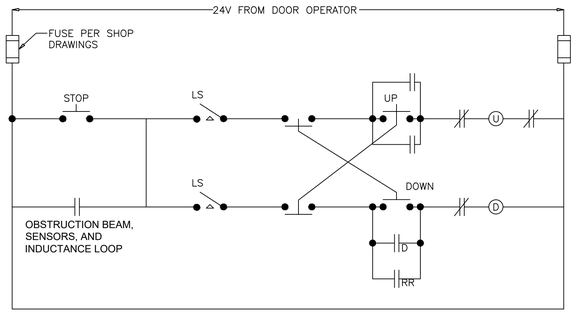

NOTES:

1. OVERHEAD DOORS ARE TO OPERATE FROM LOCAL WALL MOUNTED SWITCHES AND ALSO FROM MOBILE UNITS IN THE TRUCKS.
2. SEE POWER PLANS FOR EXACT QUANTITY OF MOTORS.
3. ONE SYSTEM EACH DOOR.

2 OVERHEAD DOOR CONTROL SCHEMATIC

SCALE: NTS

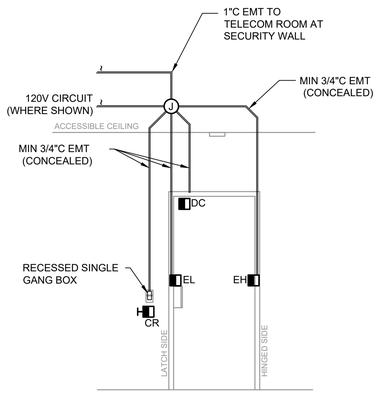

3 TYPICAL CARD ACCESS DOOR ROUGH-IN DETAIL

SCALE: NTS

NO.	DESCRIPTION	DATE
1	Addendum No. 2	09/10/26

NORTH CAROLINA PROFESSIONAL SEAL 054503 ENGINEER TYLER WINDSOR
9/9/2026

Dewberry
Dewberry Engineers Inc.
2610 Wycliff Road
Suite 410
Raleigh, NC 27607-3073
919.881.3000
NC License No. F-0929

DRAWN BY: KMS,JA,AF
CHECKED BY: TLW
APPROVED BY: TLW

WILLIARD STEWART ARCHITECTS
122 COX AVENUE
RALEIGH, NC 27605
TEL: [919] 834.0620
FAX: [919] 834.2149
williardstewartarchitects.com

WAKE COUNTY
EAST RALEIGH / KIDD ROAD I STATION 7
2910 KIDD ROAD
RALEIGH, NORTH CAROLINA 27610
OWNER: WAKE COUNTY FACILITIES DESIGN & CONSTRUCTION
PROJECT NUMBER: 50192457-01

CONSTRUCTION DOCUMENTS

DRAWING TITLE: DETAILS

SHEET: 03-E503

DATE 7/31/2026